quick reference guide topolino pad

EN

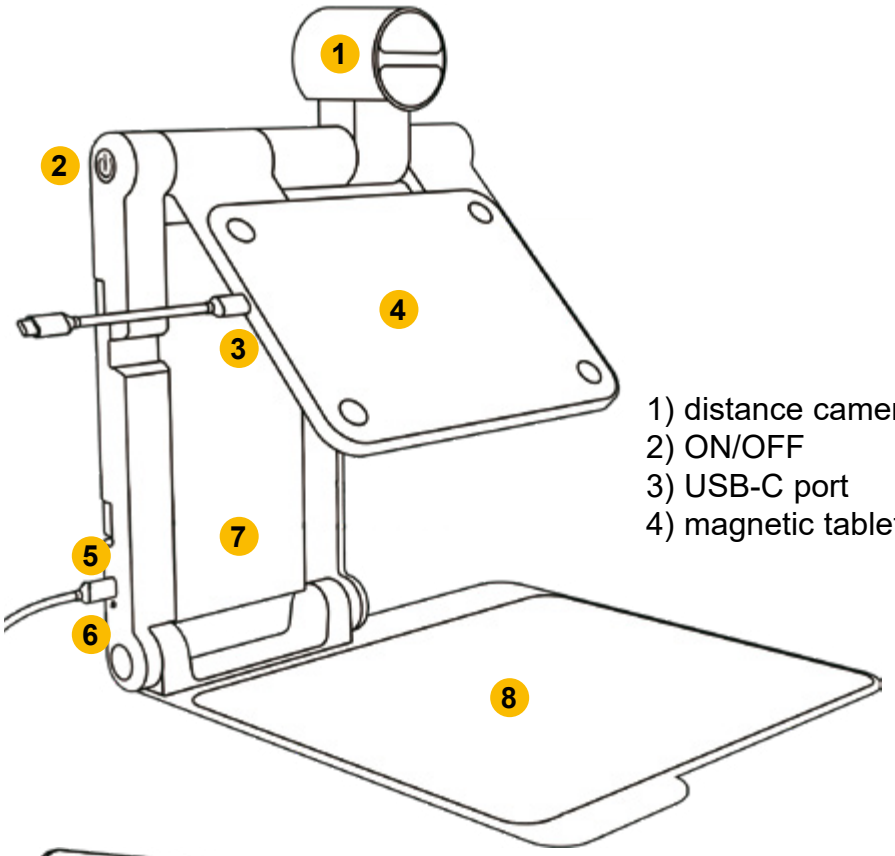

download app

1) distance camera
2) ON/OFF
3) USB-C port
4) magnetic tablet holder
5) charging socket
6) status LED
7) foldable stand
8) base plate

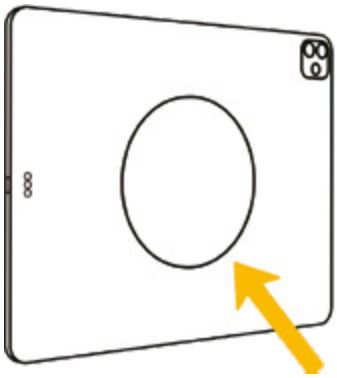

magnetic sticker

Attach the magnetic sticker to the center of the iPad/case and wait about 15 minutes before attaching the iPad to the tablet holder.

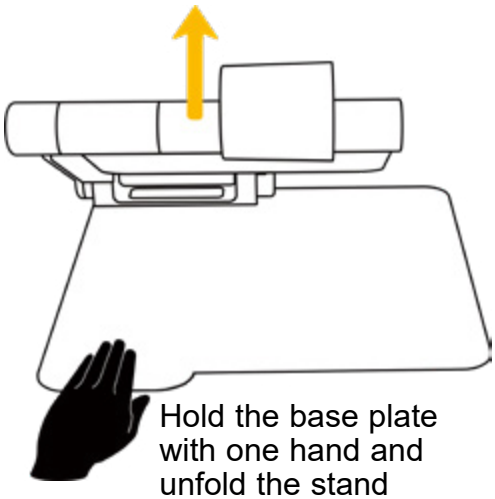

Hold the base plate with one hand and unfold the stand

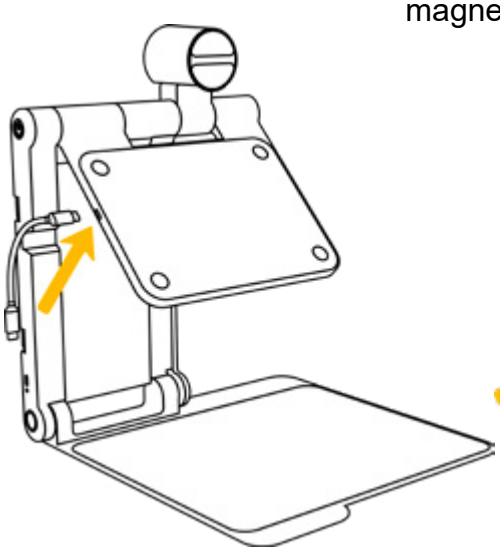

Bring the tablet holder into a comfortable viewing position and attach the iPad to the tablet holder.

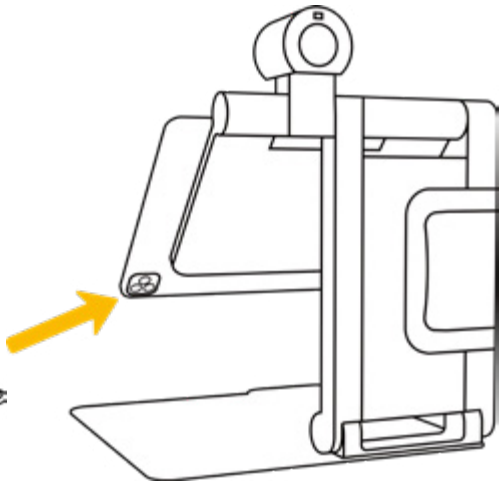

Fix the iPad in place leaving the camera unobstructed; connect the iPad and the topolino pad with the cable



To remove, hold the iPad in one corner and slide it downwards from the holder.

quick reference guide topolino pad

Operation on the device			
	Press button for about 2 seconds: turn ON/OFF		
How to use the app – General icons			
10.5X	Current magnification		Mirror distance camera
CAM	Battery status		Flash ON/OFF (only for tablet models with flash)
	with active split screen: change side of camera images		Open the system menu to share/ upload a file
	Delete image		Save changes / cancel
	Zoom in/out: use the pinch and zoom gesture		Tap on the magnified image with your fingers and move it
How to use the app – Dock			
	Take a picture		Open last image
	OCR/TTS function		Color mode
	Overview mode		Switching the viewing mode
	Detailed view		Selfie camera of the tablet
	Line ruler and line cover		Manage documents
	Settings		Autofocus ON/OFF
How to use the app – OCR/TTS function			
	Switch between text and image mode		Play/Pause
	Reading speed		Text partitioning within the image f
	Rotate image		Edit image
How to use the app – Edit image			
	Undo		pen for highlighting
	Crop image		Blur areas