Quick reference guide MANO PRO

Setting up MANO PRO

The device should also be secured to the table with the suction cup mount to prevent it from accidentally tipping over..



Slide the suction cup mount into the arm of the MANO PRO from the side.



Press the suction cup down and turn the gray ring clockwise until it clicks.

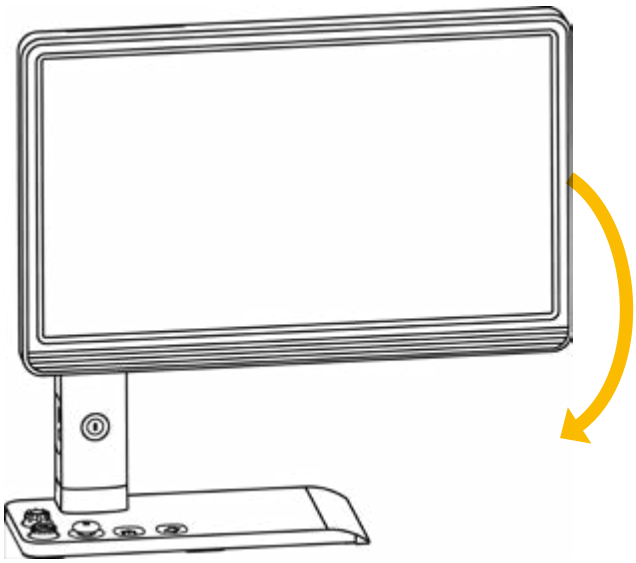

Rotate the display clockwise to switch to vertical screen view.

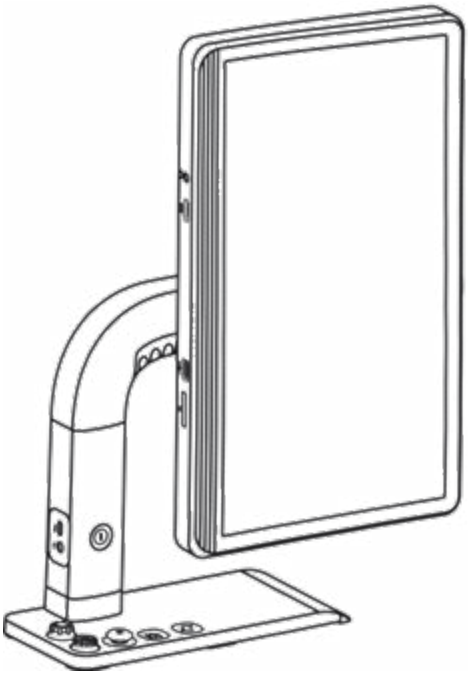

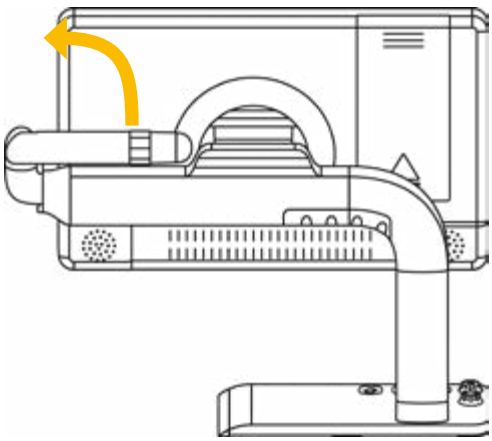

Fold up the camera arm and adjust the camera position using the gray ring.

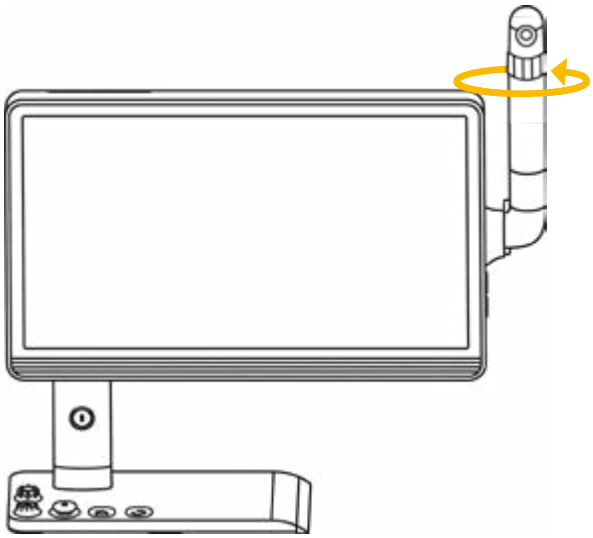

Description of the controls

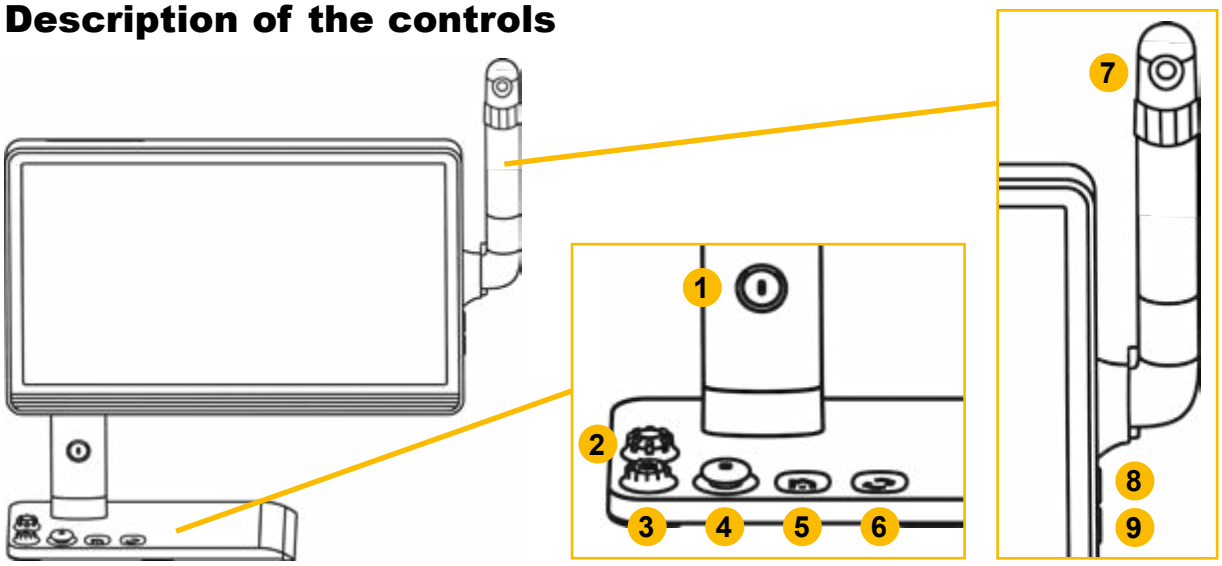

1) ON/OFF
2) freeze image/color mode (wide grooves)
3) magnification (narrow grooves)
4) joystick
5) home/main menu
6) camera switch/ switch
7) distance camera
8) volume +
9) volume -

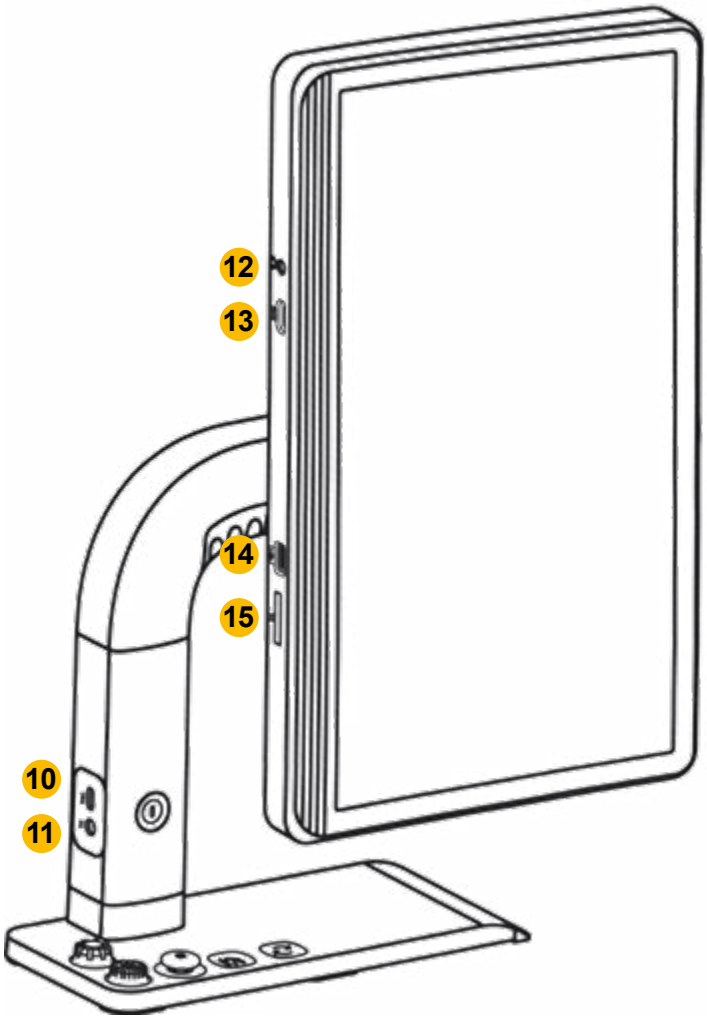

10) USB-C port (smartphone mirroring)
11) charging port
12) headphone/speaker jack
13) HDMI input
14) USB port
15) SD card slot

Operation

Operation in zoom mode and menus		
	Press button briefly: Start reading aloud	Press and hold: Switch on/off
	Press button briefly: Show/hide menu bar	Press and hold: Open menu
	Turn the knob: Switch between the different color combinations	Press the knob: Display freeze frame Press and hold: Save freeze frame
	Horizontal and vertical navigation in the enlarged image, navigation in the image gallery, adjust size and position of line ruler/cover	
	Turn the knob: Change magnification	Press the slider: Search for a section in the unmagnified image
	to zoom in: Move your fingers apart on the display	to zoom out: Move your fingers together
	Move the magnified image back and forth with your finger	
	Press briefly: Change camera view and split screen	menus and galleries: Press briefly: Confirm selection Press and hold in galleries: Multiple selection
	In menus and galleries: Tap an icon with your finger to select it	
	Hold down the switch button and press the joystick: Switch between line ruler/cover	

Operation in text-to-speech mode			
	Press briefly: Show/hide menu bar Press and hold: Exit text-to-speech mode		Turn knob: Change magnification Press knob: Zoom out
	Switch between image and text mode		
	Start/pause reading aloud		Back/forward by segment/sentence
	Set reading speed		In image mode: Save image In text mode: Save text

Mirroring and operating smartphones

MANO PRO offers the option of mirroring your smartphone screen on the display. To do this, your smartphone must have a USB-C or Lightning connector. A detailed description is available in the user manual from page <?>.

Mirroring and operating iPhones

Connect your iPhone to the USB-C port on MANO PRO using the cable provided, which is located on the left side next to the ON/OFF button. The mirrored screen will be displayed immediately.

If you want to operate your iPhone via the MANO PRO display, turn on “AssistiveTouch” under Settings > Accessibility > Touch and pair your iPhone via Bluetooth with the device “SC_ Mirror****”. Only single-finger gestures are supported.

Mirroring and operating Android smartphones

To use this function, you need the MirrorPlay app on your smartphone.

MirrorPlay app



Please install the MirrorPlay app from the Play Store before connecting your smartphone to MANO PRO.

Simply scan the QR code to go directly to the app or use the search function in the Play Store.

After installation, connect your smartphone to the USB-C port on MANO PRO using the cable provided, which is located on the left side next to the ON/OFF button.

When you open or restart the app after the initial installation, please follow the instructions to grant the necessary permission to activate smartphone screen mirroring. To do this, you must grant permission to access the microphone. This is mandatory for using the app.
After authorization, screen mirroring is usually activated automatically as soon as the USB Type-C cable is reconnected. You can choose whether you want to share a specific app or the entire screen.

Note: If you encounter problems with mirroring, please refer to the information under „Troubleshooting smartphone mirroring“ on page <?>.

Picture-in-picture display



When the smartphone mirroring is displayed, you can press the Switch button to display the image from the distance camera in a small window. The image overlays the image on the smartphone display.

You can also adjust the distance camera image. To do this, tap on the distance camera image, which now has a yellow mark. You can now adjust the magnification and color mode as usual using the buttons on the device. If you want to change the smartphone settings, tap on the smartphone screen. The distance camera image now has a gray frame.

You can change the position of the image by moving it with your finger. You can drag the corners of the image to make it larger or smaller.