User manual

topolino smart 2K

EN



Please read this user manual carefully prior to installation, use and maintenance for your own safety and in order to avoid damages on your system.

REINECKER

Reinecker Vision GmbH
Sandwiesenstraße 19 · 64665 Alsbach-Hähnlein
Email: info@reineckervision.de · www.reineckervision.de
SRN: DE-MF-000025998

EU-Konformitätserklärung
EU-Declaration of conformity

Wir erklären in alleiniger Verantwortung für alle unsere Systeme, dass diese mit den folgenden Richtlinien übereinstimmen.

Das opto-elektronische Lesesystem ist ein Medizinprodukt zum Vergrößern von Text- und Bildvorlagen. Stark sehbehinderte Menschen kompensieren damit ihre Sehbeeinträchtigung.

We declare under our sole responsibility that the systems, which have been brought into the market by us, meet the requirements of the following regulations.

This opto-electronic reading system is a medical device for magnifying text and pictures. By using this device, humans compensate for their visual impairment.

topolino smart 2K

(Art.-Nr.: TOSMA2K1)

Basis UDI-DI: 42556338CAMUQ

Richtlinie 2017/745/EU
Medical Device Regulation (MDR)
Risikoklasse I nach Anhang VIII Regel 13
CE Konformität nach Anhang IX und
RoHS II (Richtlinie 2011/65/EU)

Regulation (EU) 2017/745
concerning medical devices risk class I
according to Annex VIII standard 13
CE conformity of Annex IX and
RoHS II Regulation (EU) 2011/65

Die CE– Kennzeichnung auf dem Gerät dokumentiert diese Übereinstimmung.

The CE mark on the system points out this accordance.

Alsbach-Hähnlein,

01.12.2023

Ort und Datum der Ausstellung
Place and date of issue

M. Reinecker Geschäftsführer
M. Reinecker General Manager

Name und Unterschrift des Befugten
Name and signature of the authorized person

Content

I. General information 6
Notes on the electromagnetic compatibility (EMC) 6
Storage of the user manual 6
Product description 6
Medical device 7
Purpose 7
Evolution and lifetime of products 7
Safety advice 7
Combination with other products 7
Precautions by alteration of the performance of the systems 8
Reinstatement and installation 8
Cleaning of the system 8
Special advice for transport and storage 8
Disposal of the unit according to (EU) 2012/19 8
Power supply 8
Safety instructions 9

II. Instructions for the camera reading system topolino smart 2K 10
Delivery content 10
Available options 10
Setting up of the system 10
Connection of unit 12
- USB-connection (Type A) 12
- HDMI-connection (Type A) 12

Description of the controls 13
- Indicator for rechargeable battery 13
- Power switch ON / OFF 13
- Lights ON / OFF / DIMM 14
- Color mode 14
- Reset function 14
- Brightness 14
- Line marker / shadowing / color saturation 14
- Auto-Exposure (Iris control) ON / OFF 15
- Auto focus ON/OFF 15
- Overview mode 15
- Function Keys/Navigation Keys at the Menu 15

Save the lastest used settings 15

Controls at the rear of the camera 16
Autofocus ON/OFF 16
Overview mode 16
Zoom + / - 16
Mirror Mode 16
Start-up the camera reading system 17
Mains operation 17
Power ON 17
Power OFF 17
Automatic save regulation for the device set-up 17
Replacement of lighting 17
Automatic switching from mains operation to rechargeable battery operation 17
Important note 17
Handling the rechargeable battery 18
Replace the rechargeable battery 18
Battery operation 18
Charging the rechargeable battery 18
Operating and charging times 18
Switching from reading to distance mode 19
Position reading camera 19
Distance Viewing 19
Description of the menu settings 20
Menu selection 20
Overview: Main Menu 20
Select menu item or change setting 20
Exit menu 20
Explanation of the menu content 21
Menu settings 21
Troubleshooting 25
PC Software Installation 26
System requirements 26
Operating systems 26
Recommended PC hardware 26
Connect your camera system with a PC or notebook 27
Installation of the SuperNova software 27
Select camera system in SuperNova or Zoomtext 27
Technical Data 28
Warranty Information 29
Notes 30

I. General information

Important notes on the operation of the camera reading system topolino smart 2K!
Please read them carefully prior to the operation of the camera reading system!

Notes on the electromagnetic compatibility (EMC)

This camera reading system is suited for use in all set-ups including the domicile that are connected directly to a public power supply for buildings with residential purposes.

This camera reading system is designed for the use in the indicated electromagnetic environment. The user should ensure the use in the indicated environment.

This camera reading system operates on HF-Energy exclusively for its own function. Therefore the emitted interference of high frequency disturbances is very low and the interference with other appliances operated close-by is improbable. When operating the camera reading system simultaneously with other systems, however, the possibility of disturbances of the system or other systems should not be neglected.

For this reason it should be ensured that the system is not placed directly beside or on top of another system. If the set-up of this system in the proximity of medical, measuring devices cannot be avoided, the operator of these devices has to be informed that it is necessary to observe the performance of the system to control the conventional use of the system in the chosen set-up.

Electronic devices are sensitive towards electric discharge and towards high frequency electromagnetic fields.

Attention:
In order to avoid high frequency disturbances the operator should respect a minimum distance of one meter to portable and mobile HF-telecommunication devices.

Please also see chapter: Safety advice.

Storage of the user manual

The user manual is an essential part of your camera reading system. Please keep the booklet in a safe place for future reference.

Product description

topolino smart 2K is an opto-electronic camera reading system, which magnifies text and pictures. It may be used permanently for private and professional appliance. The text or pictures are being captured by the integrated camera and then displayed on a directly connected VGA-desktop – or notebook monitor.

- space saving, flexible reading-/distance viewing camera in up to 2K resolution (2048 x 1280p)*

  In distance viewing mode no reduced resolution up to a magnification of 22x in fullHD.

  Magnification in reading mode from approx. 1,25x to 50x*

  **(dependent on the monitor that is connected)*

- compatible with Windows 7, 8 and 10, macOS and LINUX
- dimmable illumination, battery operation, display of a full DIN A4 page
- automatical saving of reading and distance viewing mode adjustments
- HDMI and USB 3.0 interface
- compatible with SuperNova and Zoomtext to use split-screen options.

Medical device

This camera reading system is classified as a medical device, class I according to (EU) 2017/745, Annexe VIII, standard 13. For the distribution to countries outside the EU the respective country-specific guidelines have to be regarded.

Purpose

This opto-electronic camera reading system is a medical device to assist with the reading and magnifying of printed text and pictures. Visually impaired people can compensate for their loss of visual acuity by using this device.

Evolution and lifetime of products

The Medical Device Directive regulates by law that manufacturers of medical devices shall determine a period of safety operation of a product. We fulfill hereby legal requirements and determine - for formal reasons - a period of three years after date of first purchase.

Note:
The mentioned life span does not reflect the complete life span of the topolino smart 2K. It is rather an indication on when the product might be obsolete and substitution might be recommended due to new product developments.

Safety advice

topolino smart 2K has to be installed in closed and dry rooms only. Do not plug topolino smart 2K into an electrical circuit that is also being used for any life sustaining or support systems.

The device may not be used in the patients environment. This device should not be operated in explosion-endangered environments. This opto-electronic device should only be installed in conjunction with modern electrical circuitry. The openings in the casing ensure optimum cooling and must not be covered.

Combination with other products

Warning: This camera reading system must not be located directly besides, next or on top of another medical device. If the device is used near another electrical device, monitor the other device to ensure that it is working properly.

In case of doubt please contact Reinecker Vision GmbH or any licensed distribution-partner.

Precautions by alteration of the performance of the systems

Stop using the reading device if technical features or performances should change. Switch the device OFF and disconnect the power supply from the mains wall socket. Refer directly to your authorized dealer or to Reinecker Vision GmbH Service Center.

Reinstatement and installation

This device may be technically maintained and reconditioned by Reinecker Vision GmbH only or by an authorized technician. Reinstatement may only take place after the system has been cleaned and safety checked.

Cleaning of the system

- topolino smart 2K has to be disconnected from the power supply before cleaning.
- Clean the system with a slightly damp cloth and a mild household detergent.
- Interior of device must NOT come in contact with liquids.

Special advice for transport and storage

For reasons of safety, the unit must only be transported and stored in the original packing. The unit must be stored in dry and closed rooms in the original packing.

The following conditions for transport and storage have to be respected:

- Air pressure 700 bis 1000 hPa
- Temperature range +5°C to + 50°C
- Relative air humidity 30% to 80%

Disposal of the unit according to (EU) 2012/19

topolino smart 2K contains of electronic components. To avoid damage to the environment, the country-specific rules have to be respected.

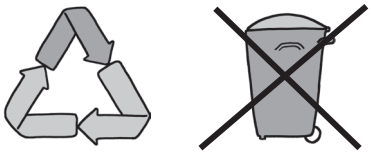

Power supply

Only use the original power supply which is included in the delivery by Reinecker Vision GmbH.

Caution:
The use of any other equipment might lead to an increased electromagnetic emission and to a product damage.

Safety instructions

Please respect the following safety instructions:

1. Do not plug the AC adapter into a faulty electrical outlet. Doing so may cause electrical shock or fire.
2. Do not touch the AC adapter with wet hands.
3. Only use the original power supply which is included in the delivery by Reinecker Vision GmbH. The use of any other equipment might lead to a product damage.
4. For topolino smart 2K with battery operation only: Only use the original battery, which is included in the delivery by Reinecker Vision GmbH. The use of any other equipment might lead to a product damage.
5. Do not expose the system to direct sunlight or to very hot or cold environment, as this would harm the picture quality.
6. Do not operate this device below +5°C or above +40°C.
7. No liquids must reach the interior of the system. Only operate the device in a dry environment.
8. The device may not be operated next to medical devices (patients environment).
9. Do not lean on the system and do not put heavy objects on it as the system could be damaged.
10. Do not try to repair or to dismantle the system by your own. This would automatically void the warranty. If you need any technical assistance please get in contact with the local distributor or with Reinecker Vision GmbH.
11. Always switch OFF the system and disconnect it from the power supply before cleaning it. Only use a soft and slightly damped cloth. Only use a mild household detergent. Do not use alcohol containing or strong detergents.

II. Instructions for the camera reading system topolino smart 2K

Delivery content

- Camera reading system topolino smart 2K
- Power supply unit 12V DC / 5,0A
- Adapter cable (country-specific)
- carrying bag
- USB cable 3.0
- DVD with PC software “Dolphin SuperNova” (demo version), for showing the camera image in different modes (e.g. image splitting) on PC or notebook
- User manual
- Information sheet for repair cases

Available options

- HDMI cable
- xy-table with friction brake, comfort xy-table with 2 friction brakes
- Notebook, Monitor
- HDMI-SWITCH (2 input/1 output) with foot switch
- magnification software for PC

Setting up of the system

Your system will normally be unpacked and set up by the supplier’s representative.

If you have not purchased a stand that fits to the product you must provide a solid surface for the system with sufficient surface area.

Set up device according to pictures below:

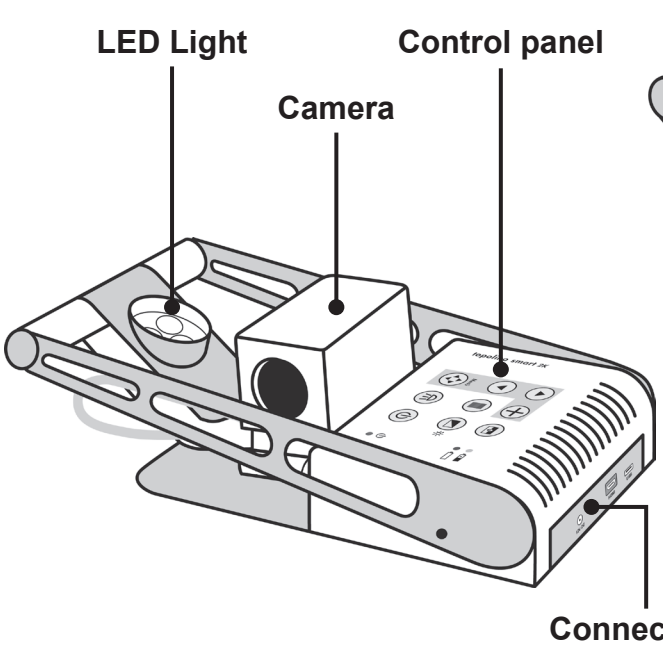

Folded topolino smart 2K in transport position.

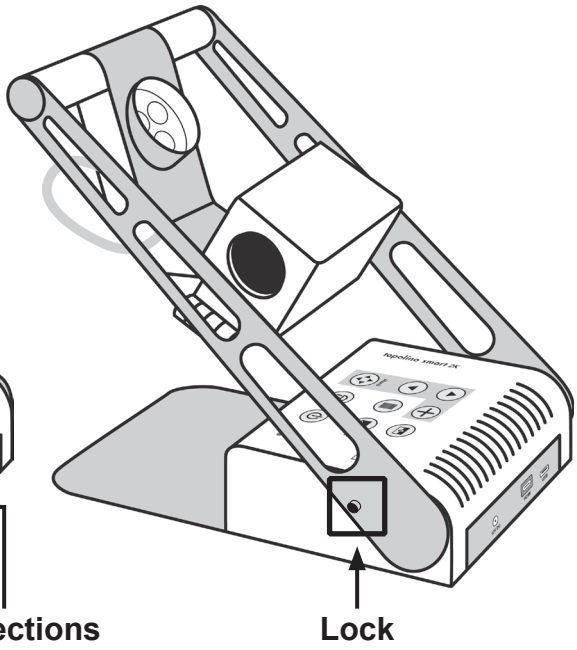

Pull up the camera stand until it snaps in place and the arm is completely locked.

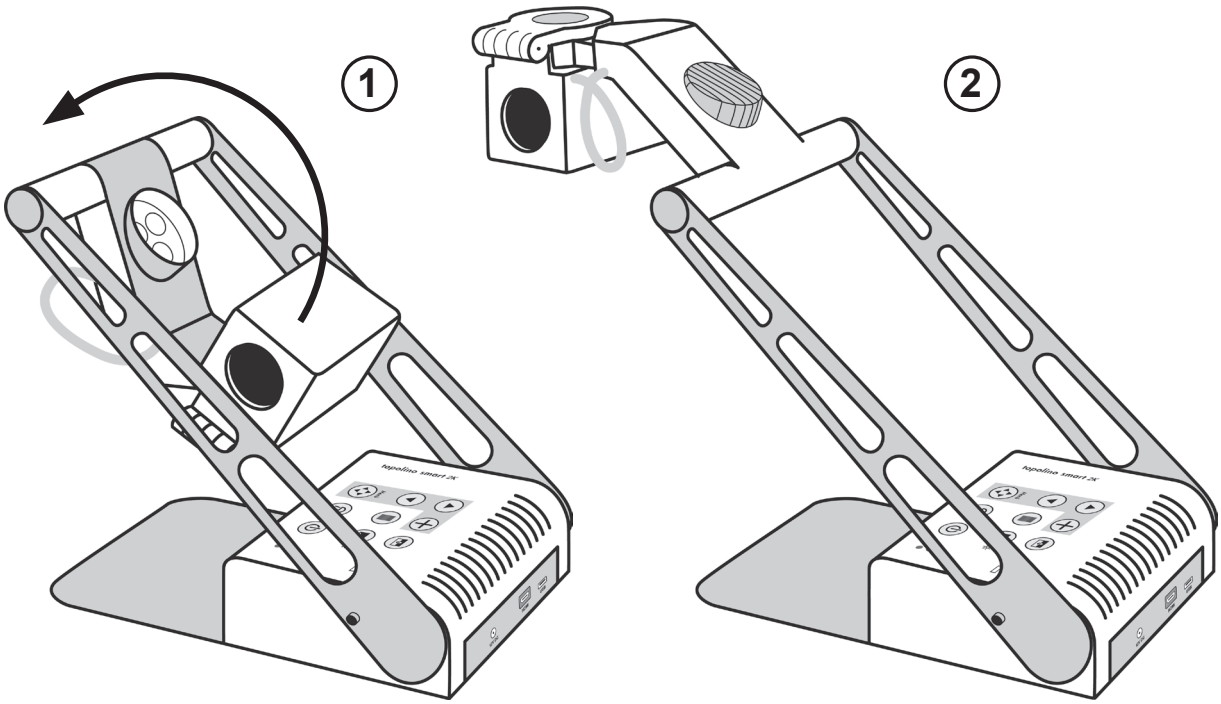

Swivel the camera head up until it stops **(picture 1-2)**.

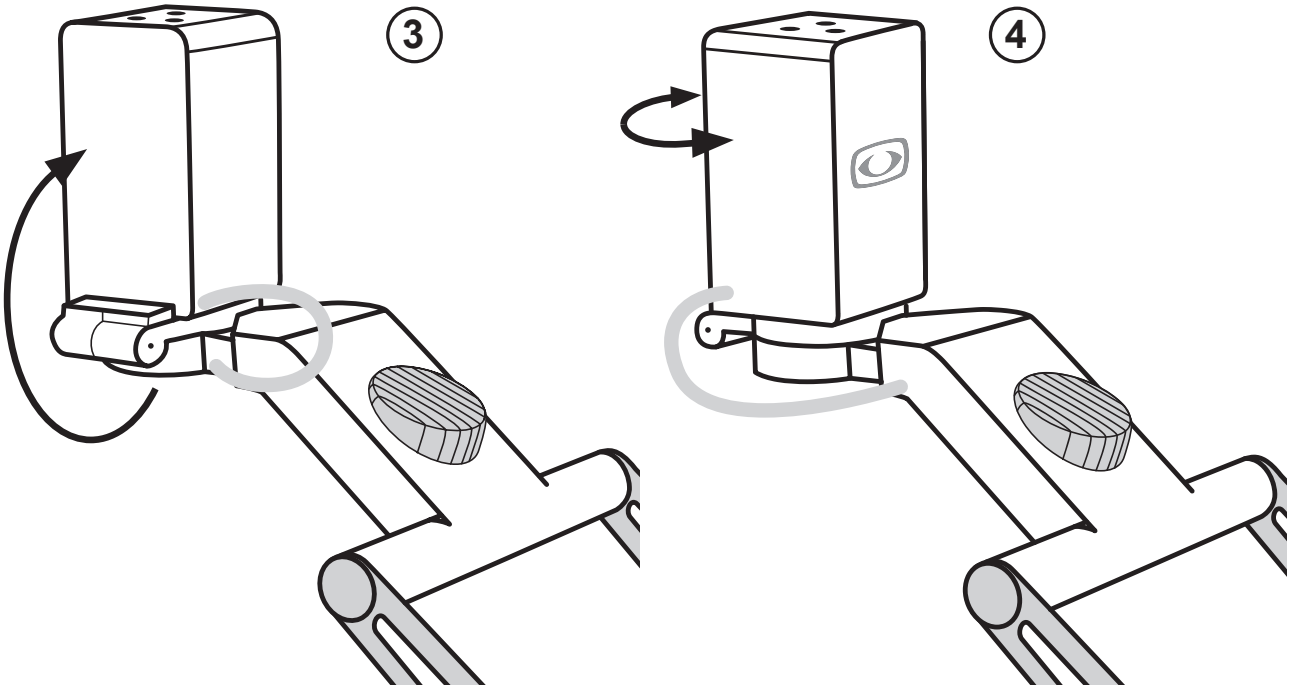

Using the round cross bar as the pivot, pull the camera head and LED light arm up and towards yourself until the LED lights are pointing down towards the table **(picture 3).**

At the hinge by the rectangular camera head, bring the camera into the upright position. When turning the camera you will feel a click. Now the camera is aligned horizontally **(picture 4)**.

Connection of unit

Connect the power supply to a mains wall socket and plug the adapter end of the cable into the AC input socket (12 VDC) located on the base plate of the topolino capo 2K.

Note:
The supplied plug-in power supply is exclusively for the operation of this device. Please do not use any other power adaptor or cable.

Once the device is plugged in, it is ready to use.

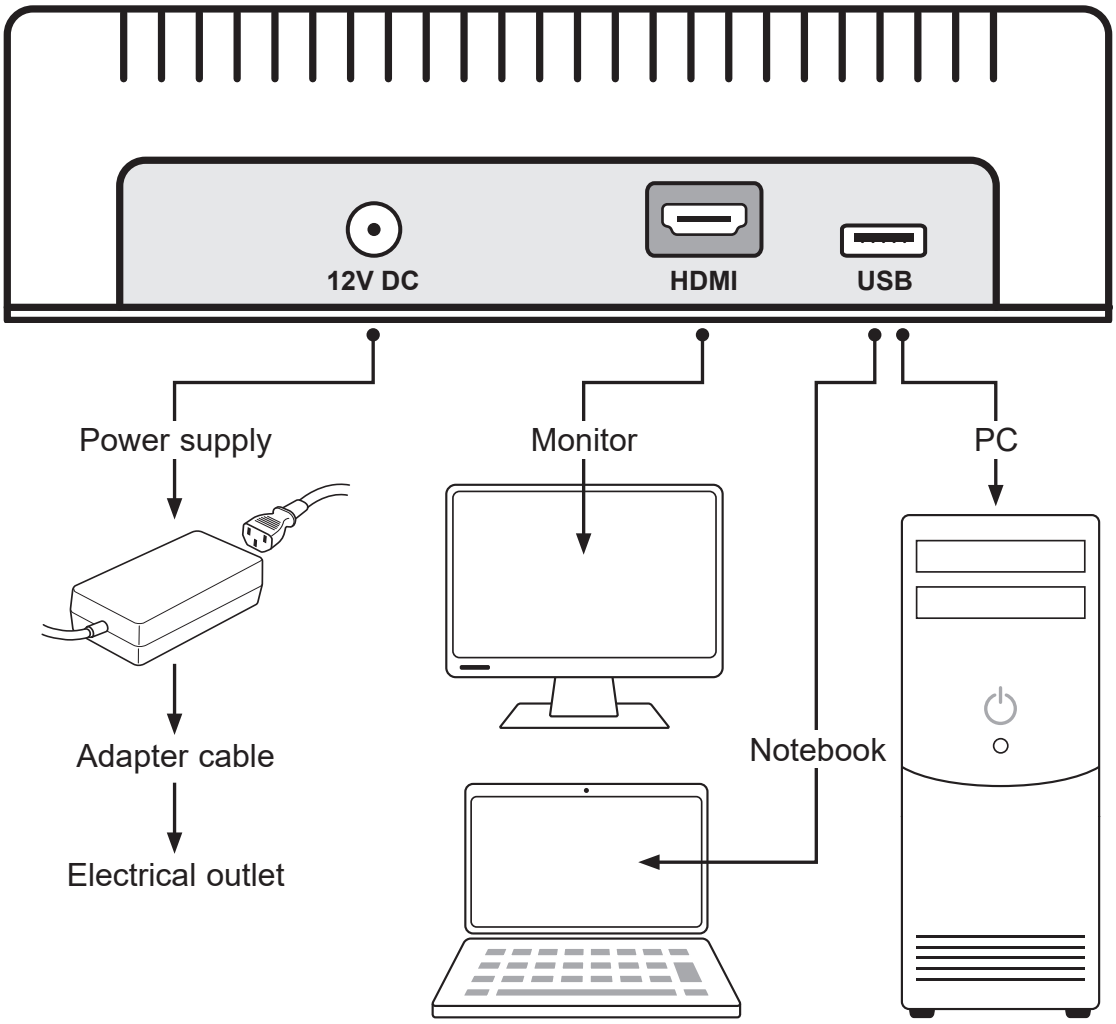

USB-connection (Type A)

USB 3.0 port for connecting a PC or notebook.

HDMI-connection (Type A)

Connection for external monitor with HDMI port.

Description of the controls

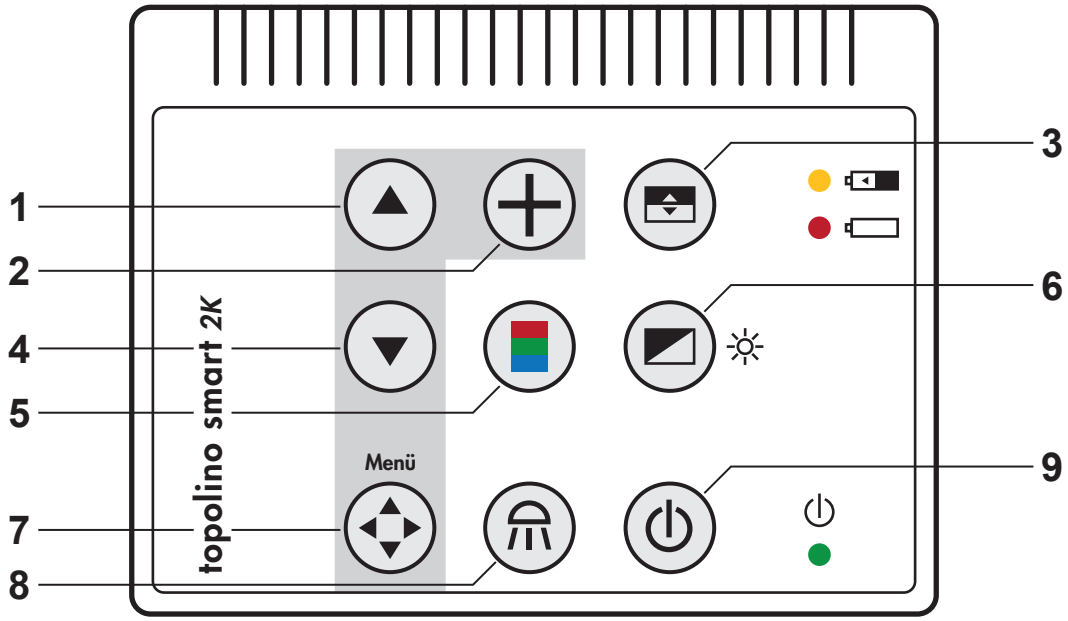

Indicator for rechargeable battery

If the battery is nearly empty, the red LED lights up. If the battery is too low, the device switches OFF automatically. In this case, connect the device to the power supply and recharge the battery. During charging, the yellow battery indicator on the device lights up.

Power switch ON/OFF

The device can be switched ON or OFF by pressing the power button **(9)**. When the device is switched ON, the green LED lights up.

When the device will be turned OFF, the latest used settings are saved automatically.

When switching ON again, the latest used settings are reactivated.

Attention!
If the reading surface (baseplate) is not lit up after switching ON the device, please check if the LED-light is ON (see following description).

Lights ON/OFF/DIMM



By pressing the control button **(8)** briefly, the lighting can be switched ON or OFF. By pressing the control button **(8)** for a longer time, the light can be dimmed continuously (brighter or darker). Each time you press and hold the control button **(8)**, the direction of dimming changes.

By down-regulating the light, it can be dimmed to the minimum possible level.

By up-regulation the light, it can be dimmed to the maximum possible level.

If the button is released within the dimming process, the currently achieved light intensity is saved.

If you start dimming again, it starts in the opposite direction.

Please note: When restarting, the last setting is recalled.

Color mode



Press the control key **(5)** briefly to switch between different color modes (true colors and artificial colors pos./neg.)

Reset function



Press the color mode control button **(5)** for approx. 4 seconds until the reset function starts. The system will be reset to factory settings.

Brightness



Pressing this button **(6)** will change the brightness settings (light intensity) of the camera image.





Pressing the arrow keys **(1/4)** will change the brightness or the contrast in the true color mode and the off-color mode (range from -50 to +50).

Arrow key up (1): max. contrast, max. brightness
Arrow key down (4): min. contrast, min. brightness

Line marker/shadowing/color saturation



This control button **(3)** has 3 functions: Line marker, shadowing and color saturation:

- Press once: Line marker is activated
- Press again to deactivate the line marker and activate the shadowing.
- Press again to deactivate shadowing and open the option to adjust the color saturation.





By pressing the arrow keys **(1/4)**, the line marker or shadowing can be moved horizontally upwards / downwards (factory setting) or the color saturation can be changed (arrow key down **(4)**: paler / arrow key up **(1)**: brighter).

Please note:
Via the menu you can also switch to vertical line marker/shadowing.
(Please see page 21)

Auto-Exposure (Iris control) ON/OFF



In document mode iris control can be switched ON/OFF by pressing the iris control button **(3)** (Auto-Exposure).

Auto-Exposure ON: The brightness of the camera image is adjusted automatically depending on the lighting conditions.

Auto-Exposure OFF: The brightness of the camera image is **NOT** adjusted automatically.

Auto focus ON/OFF



Briefly pressing the control button **(2)** switches the auto focus alternately ON or OFF. When the auto focus is ON, the camera automatically adjusts the focus within its magnification.

Overview mode



If you work with a large magnification and no longer know which area of the reading template you have enlarged, this function gives you an overview of the position of the enlarged area.

Therefore press the control button **(2)** for about 2 seconds until the overview mode starts and the image on the monitor is zoomed out. The crosshair in the center of the monitor works as pointer to show which area has currently been enlarged.

If you release the control button **(2)** the image returns to the originally selected magnification.

Please note:
The camera can also be swiveled beforehand to a different area, which is then enlarged accordingly.

Function Keys/Navigation Keys at the Menu



You can switch ON/OFF the internal menu by pressing the Control key **(7)**.



Arrow key up (1): move upwards in the menu



Arrow key down (4): move downwards in the menu



Plus button (2): change or confirm the selected settings

Save the lastest used settings

When switching ON the topolino smart 2K again (after switching OFF), the image appears with the latest used settings and magnifications.

Controls at the rear of the camera

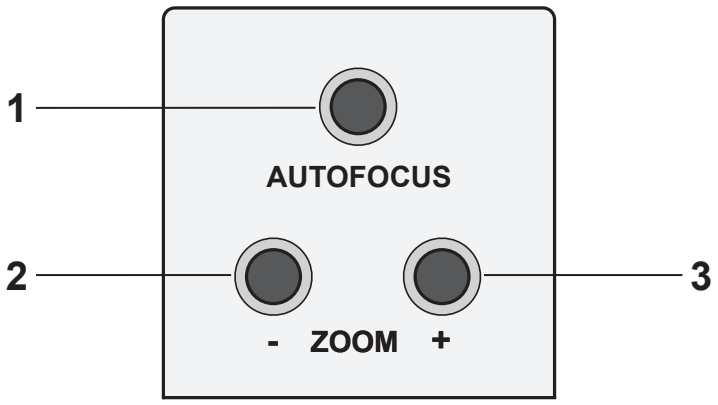

Autofocus ON/OFF

By using the autofocus key **(1)**, autofocus can be turned ON or OFF. The status of the autofocus function is displayed for approximately 4 seconds at the bottom of the screen. When autofocus is switched ON, the camera will automatically adjust the focus setting.

Overview mode

If you are working with a higher magnification and you do not know which area of the reading material or which part of the room you want to locate, this function will give you an overview of the magnified area.

To activate the overview mode and temporarily zoom out for scanning (either in reading or distance mode), hold down the AF key **(1)** until “overview mode” is displayed at the bottom left of the screen and the camera zooms out.

The cross-hair in the middle of the picture serves as a locator for the material you want to magnify. Center the cross hair on the desired viewing object and then release the AF key **(1)**. The camera will then automatically zoom back in and return to your original magnification setting.

Please note: The camera can also be swiveled beforehand to a different area, which is then enlarged accordingly.

Zoom + /-

The magnification can be increased or decreased by using the keys + **(3)** / – **(2)**.

Mirror Mode

The picture display on the monitor can be changed to operate as if you were looking at a mirror.

This is useful if you want to perform a personal task such as shaving or applying make up. To enter the mirror mode, press and hold down the zoom + **(3)** and zoom – **(2)** keys, until the display briefly indicates “mirror ON”. Then, flip the camera up as if you were using the distance mode. Rotate the camera as far as you can back towards you. It cannot rotate back the full circle, so you will have to re-position the base of the unit to get the camera pointing towards the user. For best operation, turn the Autofocus OFF while in mirror mode.

To return to the normal operating state, press and hold down both keys again until the display indicates a sign “mirror OFF” and the image will be back to its normal operating state.

Start-up the camera reading system

Mains operation

Check if the power adapter is connected to the mains and the power supply socket (12V DC) of the topolino smart 2K.

Power ON

Press the ON/OFF button to switch ON the device. When the topolino smart 2K and the baseplate is illuminated, you can put a page or an object onto the table.

All the optional settings – for example zoom, colour or brightness- can be adjusted individually.

Power OFF

Switch OFF the device with the ON/OFF button.

Automatic save regulation for the device set-up

When you reset the device all settings used before will be activated again.

Replacement of lighting

The electronic magnifier is equipped with a high power LED Illumination.

If replacement of the lamp is required it should only be done by a specialist or by Reinecker Vision GmbH.

Automatic switching from mains operation to rechargeable battery operation

As soon as topolino smart 2K is plugged into the electrical outlet, the system switches automatically to electrical power operation even if it had been operating on the battery.

Important note

Please only use the power supply included in the delivery. Use of any other power supply will void the warranty!

Handling the rechargeable battery

Attention: In order to assure a long life span of the rechargeable battery you must follow the instructions for charging and operating the battery:

- The battery is only fully charged once the yellow charging light turns OFF.
- If topolino smart 2K will not be used for a long time, please charge the battery completely. Even if switched OFF, topolino smart 2K may discharge. Total discharge might damage the battery.

Replace the rechargeable battery

- The rechargeable battery may only be exchanged by Reinecker Vision GmbH or by an authorized specialized retailer.
- You must only use the original rechargeable battery.
- Replacement batteries can be ordered through Reinecker Vision GmbH. Article number: [00350406]
- The usage of other rechargeable batteries will damage the system. All warranties of defects for topolino smart 2K will then be voided.

Battery operation

Make sure that the power supply is disconnected once the battery has being charged completely.

- Press the ON/OFF button to turn the unit ON
- Permanent red LED: this indicates that the rechargeable batteries will only work for 10 minutes
- Flashing red LED: this indicates that the rechargeable batteries will be switched OFF; you may no longer use the rechargeable battery. They have to be charged again.

Charging the rechargeable battery

- permanent red LED
- connect the power adapter with a power outlet
- Switch the unit OFF or use it without lights (turn the lights OFF, too)
- Permanent yellow LED: battery is going to be recharged
- Once the battery has been charged, the yellow LED disappears
- topolino smart 2K is ready to being used in battery operation

Operating and charging times

- When the battery is fully charged, the operating time is approx. 4 - 10 hours, depending on the selected brightness level.
- When the topolino smart 2K is switched OFF, the charging time of the battery is approx. 4,5 hours.

Switching from reading to distance mode

Position reading camera

Pivot the camera head so that zoom buttons are facing up and the Reinecker logo and the camera hinge are facing the user. This will allow you to read any material which you place under the camera. Reading illumination will turn ON automatically.

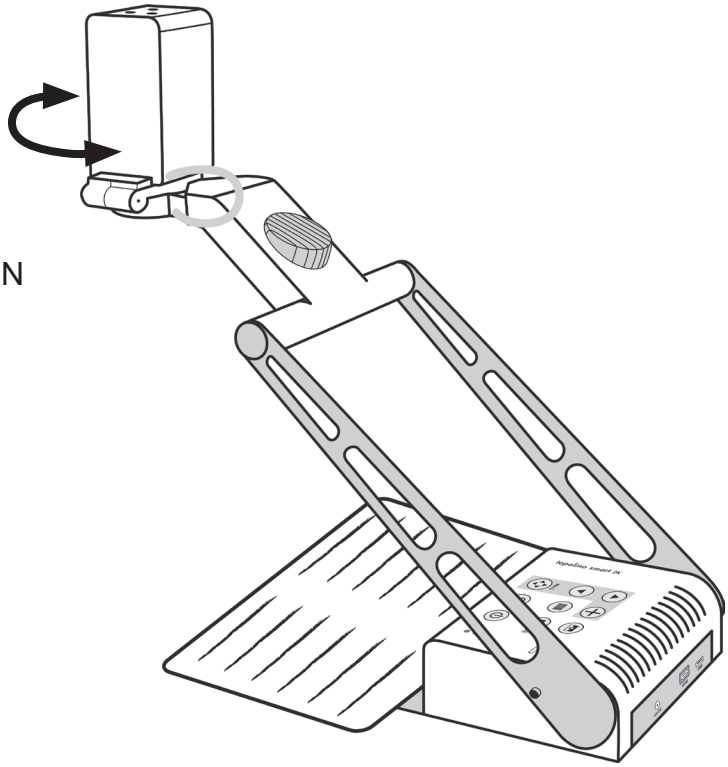

Distance Viewing

Pivot the camera head at the hinges, back towards the user. Stand illumination turns OFF automatically.

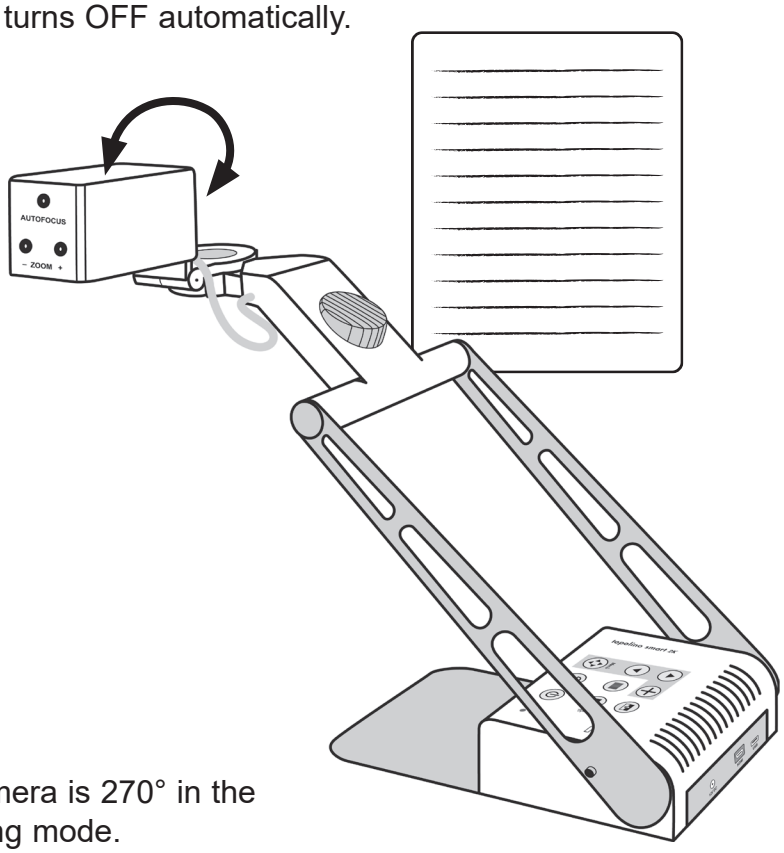

Note:
The swivel range of the camera is 270° in the reading and distance viewing mode.

Description of the menu settings

Menu selection

Press the Menu button on the control panel to enter/exit the menu.

Overview: Main Menu

The main menu shows the different options to set individualize your system:

Main Menu	
Brightness	+50
Contrast	+50
Colour Saturation	- 30
Ruler / Mask	OFF
Ruler / Mask Settings...	
AF Modus	Continuous / Zoom
Reset to Factory Settings	
Recall User Settings...	
Advanced Settings...	
Exit	

Please note: If the screen remains black, it could be due to an incorrectly set resolution (TFT monitors must not be operated at a higher resolution than their native resolution). In this case please reset the system via the color mode button (please see page 14).

Select menu item or change setting

Please select menu item with the buttons or and change or confirm with -button.

Exit menu

Please move onto menu item “Back” or “Exit” with buttons or and press -button to exit menu. Alternatively press button to directly exit the menu.

Explanation of the menu content

The image shows in detail how the menu is structured.

Main Menu	← Menu level 1
Advanced Settings	← Menu level 2
Special Settings	← Menu level 3
Customize Buttons	← Menu level 4
Function	**adjustment range** | explication

Menu settings

Main Menu	
Brightness	**Brightness adjustment range from -50 to +50**
Contrast	**Brightness adjustment range from -50 to +50**
Colour Saturation	**Brightness adjustment range from -50 to +50**
Ruler / Mask	**OFF** | deactivate line marker and shadowing **Ruler** | activate line marker **Mask** | activate shadowing

Main Menu	
Ruler Settings	
Ruler / Mask	**OFF** | deactivate line marker and shadowing **Ruler** | activate line marker **Mask** | activate shadowing
Ruler Position	**0 to 100** | adjust line marker position
Mask Position	**0 to 100** | adjust shadowing
Ruler Mode	**Horizontal** | Align the ruler horizontally **Vertical** | Align the ruler vertically
Mask Mode	**Left/Right** | Shadowing left/right; shadowing up to 50% **Top/Bottom** | Shadowing top/bottom; shadowing up to 50% **Left/Right FS** | Shadowing left/right; shadowing up to 90% **Top/Bottom FS** | Shadowing top/bottom; shadowing up to 90% **Full-Screen** | Shadowing covers whole screen
Mask Transparency	**50%** | **25%** | **0%**

Main Menu	
Ruler / Mask Settings	
Ruler Color	
Red	adjustment range from 0 to 31
Green	adjustment range from 0 to 31
Blue	adjustment range from 0 to 31
Return	

Main Menu	
AF Mode	Semi-Automatic | Semi-Autom. + Zoom | Continuous/Zoom
Reset to Factory Settings	Return to factory settings
Recall User Settings	Return to individual settings
Advanced Settings	*(see overview)*
Exit	

Overview:	Advanced Settings	
	Color Combination Setup	
	Image Rotation	0°
	Monitor Brightness	100
	Language	English
	Perform White Balance	
	White Balance Mode	Auto
	Sharpness Settings	
	OSD Messages	OFF
	Special Settings	
	Return	

Main Menu	
Advanced Settings	
Color Combination Setup	
Color Combination 1-6	
Mode	Disabled | Full Color | Grayscale | False Color
Foreground	Black | Red | Green | Blue | Yellow | Magenta | Cyan | White | User 1 | User 2
Background	Black | Red | Green | Blue | Yellow | Magenta | Cyan | White | User 1 | User 2
Swap Fore-/ Background	Press button “plus (+)” to switch between the two views (positive and negative).
Return	

Main Menu	
Advanced Settings	
Color Combination Setup	
User colors	
User color 1 - Red	adjustment range from 0 to 31
User color 1 - Green	adjustment range from 0 to 31
User color 1 - Blue	adjustment range from 0 to 31
User color 2 - Red	adjustment range from 0 to 31
User color 2 - Green	adjustment range from 0 to 31
User color 2 - Blue	adjustment range from 0 to 31
Return	

Main Menu	
Advanced Settings	
Image Rotation	0° | +90° | 180° | -90°
Monitor Brightness	adjustment range from 37 to 100
Language	English | German | French | Norwegian
Perform White Balance	Press button “plus (+)” to perform white balance
White Balance Mode	Auto | One-Push *(please see: perform white balance)*

Main Menu	
Advanced Settings	
Sharpness Settings	
Reading Mode:	
Real Colour Sharpness	adjustment range from 0 to 24
False Colour Sharpness	adjustment range from 0 to 24
Room Mode:	
Real Colour Sharpness	adjustment range from 0 to 24
False Colour Sharpness	adjustment range from 0 to 24
Return	

Main Menu	
Advanced Settings	
OSD Messages	ON | OFF
Special Settings	*(see overview)*
Return	

Overview:	Special Settings	
	Zoom Extension	**ON**
	Max. Digital Zoom	**3.5x**
	Resolution...	**1080p/60**
	Sensor Setup...	
	Reset to Factory Settings	
	Expert Settings	
	Monitor size	**19"**
	Return	

Main Menu	
Advanced Settings	
Special Settings	
Zoom Extension	**ON** | **OFF**
Max. Digital Zoom	**OFF** | adjustment range from 1,5x to 15x

Main Menu	
Advanced Settings	
Special Settings	
Resolutions 1080p/60	
4 : 3:	**High Resolutions**
UXGA60 (1600 x 1200)	resolution to be confirmed
16 : 9:	**High Resolutions**
1080p60 (1920 x 1080)	resolution to be confirmed
2K60 16 : 9 (2048 x 1152)	resolution to be confirmed
16 : 10:	**High Resolutions**
WUXGA/60Hz (1920 x 1200)	resolution to be confirmed
2K56 16 : 10 (2048 x 1280)	resolution to be confirmed
Low Resolutions...	Press button “plus (+)” to switch to the next option
Return	

4 : 3:	**Low Resolutions**
XGA/60Hz (1024 x 768)	Resolution to be confirmed
SXGA/60Hz (1280 x 1024)	Resolution to be confirmed
16 : 9:	**Low Resolutions**
WXGA2/60Hz (1366 x 768)	Resolution to be confirmed
16 : 10:	**Low Resolutions**
WXGA+/60Hz (1440 x 900)	Resolution to be confirmed
WSXGA+/60Hz (1680 x 1050)	Resolution to be confirmed
High Resolutions...	Press button “plus (+)” to switch to the next option
Return	

Main Menu	
Advanced Settings	
Special Settings	
Sensor Setup...	
Shutter False Col. Read	**1/100 | 1/120 | 1/150 | 1/200 | 1/250**
Shutter Real Col. Read	**1/100 | 1/120 | 1/150 | 1/200 | 1/250**
Shutter False Col. Room	**1/20 | 1/25 | 1/30 | 1/33 | 1/50 | 1/60 | 1/75**
Shutter Real Col. Room	**1/20 | 1/25 | 1/30 | 1/33 | 1/50 | 1/60 | 1/75**
Noise Red. F. Col. Read	**OFF | adjustment range from 1 to 4**
Noise Red. R. Col. Read	**OFF | adjustment range from 1 to 4**
Noise Red. F. Col. Room	**OFF | adjustment range from 1 to 4**
Noise Red. R. Col. Room	**OFF | adjustment range from 1 to 4**
Return	

Main Menu	
Advanced Settings	
Special Settings	
Store User Settings	Press control button “plus (+)” to save individual user settings
Expert Settings	Access only by authorized service
Monitor size	**Auto | 19" | 22" | 24"**
Return	

Troubleshooting

Problem	Solution
No image is shown.	Check the mains connection, the cable connection to the monitor and that all relevant systems are switched ON or activated.
Screen is dark.	Check the brightness and contrast settings of the camera/monitor.
True colour is not displayed correctly.	Check your reading material, colour mode setting, brightness, colour saturation and camera lighting.

PC Software Installation

To show the topolino camera image on your PC or notebook, a magnification software e.g. SuperNova (from version 16) or Zoomtext (from version 10) is needed.

If no magnification software is installed on your PC or notebook yet then install the PC software free of charge from the Internet “SuperNova Magnifier & Speech”. (demo version)

https://www.reineckervision.de/medien/software-testversionen/

After the software installation SuperNova will provide you with all the camera features and their viewing modes (such as image splitting) and PC image enhancement features. The camera functions can be used permanently with SuperNova as of version 16.05. For the first 30 days you can also use all other features of SuperNova. After the 30 days, only the camera functions are available.

If a full version of Zoomtext or “Dolphin SuperNova” has been purchased, this must be activated via Internet with the appropriate activation code.

Please note:

- For the time of the software installation, you may need administrator rights from your IT department.
- Your computer should meet the system requirements.
- Before installing the software, we recommend a Windows Update to make sure your operating system is up to date.

System requirements

Operating systems

- Windows 7 (all versions) 32 and 64 bit
- Windows 8.1 (all versions) 32 and 64 bit
- Windows 10 (all versions) 32 and 64 bit

Recommended PC hardware

- **Processor:** 1.5 GHz or higher, compatible with SSE2 command set support
- **RAM:** 4GB or higher
- **Hard disk:** 5GB free disk space for example for “Dolphin SuperNova” magnification (Magnifier)
- **Graphic card:** 512MB RAM graphic card space with DirectX 9.1 support
- **Sound card:** If required Windows compatible sound card for example for “Dolphin SuperNova” magnification with voice output
- **USB ports:** 1 x USB 3.0 for the topolino camera system

Connect your camera system with a PC or notebook

1. Once your PC or notebook has been booted, connect your camera system via the USB 3.0 cable (included in the delivery) with an active USB 3.0 interface.
2. Turn your camera system ON, to start installation of drivers. Make sure that the device is connected with the internet.

Installation of the SuperNova software

Start your software “Dolphin installation program” with a double click and please perform the following steps:

1. click on “Yes” to start the installation process.
2. after a few minutes you will see at the bottom right of the screen the icon “File successfully extracted”.
3. In the following window, select the product language and confirm the language selection with “Next”.
4. first read the license agreement “SuperNova Screen Magnification” through. Then click on “Accept” to start the installation.
5. Click on “Restart” before running SuperNova. After the computer is restarted, SuperNova will run automatically.

Select camera system in SuperNova or Zoomtext

1. After successful installation, start your magnification software SuperNova or Zoomtext.
2. Select within the SuperNova or Zoomtext software the camera system **“USB Capture HDMI”**.
3. The camera system is now ready for being used with the appropriate functions of the SuperNova or Zoomtext software. More detailed information can be obtained within the corresponding user manuals.

Technical Data

- **Camera:** 2K reading-/distance camera with highest image resolution, up to 2048 x 1152 at format 16 : 9
  2048 x 1280 at format 16 : 10
  (only via HDMI port)
  approx. 22 times lossless magnification
  magnification at document mode:
  approx. 1,25 - 100 times (dependent on monitor size)
- **Auto focus:** comfort auto focus, switchable
- **Color mode:** true colors, high contrast false colors and further individual color to be switched ON or OFF
- **Operating Time:** approx. 4 - 10 hours
  (depending on the illumination used)
- **Battery Charging Time:** approx. 4,5 hours
- **Weight:** approx. 2,3 kg
- **Measurements (BxHxT):** measurement built up approx. 19 x 45 x 45 cm
  measurement folded: approx. 19 x 10 x 36 cm
- **Electricity Supply:** external power supply
  input: 100-240 VAC 50/60 Hz / 1,5A
  output: 12V DC 5,0A
  (in connection with plug-in power supply)
- **Power Consumption:** approx. 45 watt

Warranty Information

1. Reinecker Vision GmbH grants a warranty of 24 months against defects in manufacture counted from date of invoice ex Reinecker Vision GmbH.

2. All parts that have been replaced when repairing the unit will automatically become property of Reinecker Vision GmbH.

3. Damage caused by improper use or by non-compliance with the operating instructions will result in the invalidation of the warranty.

4. Interventions from persons other than Reinecker Vision GmbH authorised specialists may lead to invalidity of warranty.

5. The liability for defects in material does not include illuminants that serve to illuminate the reading material and other parts subject to wear and tear, such as rechargeable batteries, etc.

6. If a warranty claim is necessary, the system has to be returned to the manufacturer in Alsbach-Hähnlein or to your authorized dealer in the original packaging including all components. The manufacturer does not carry the cost for transport, packaging and insurance. Prior to returning the system, a RMA number issued by Reinecker Vision is required. Please have the exact serial number of your system before hand.

Phone number: +49 6257 9311-0

View our General Terms and Conditions.

Your authorized distributor:

Notes

Type:	topolino smart 2K (TOSMA2K1)
Serial number:	
Manufacturer:	Reinecker Vision GmbH
Final examination:	
Power supply:	100 VAC – 240 VAC 50-60 Hz
With plug-in power supply:	12V DC/5,0A
Power consumption:	max. 45 watt

Reinecker Vision GmbH
International Contact

sales department, customer relations:
Sandwiesenstraße 19
DE-64665 Alsbach-Hähnlein

customer service:
Erlenweg 3
DE-64665 Alsbach-Hähnlein

Tel.: +49 6257 9311-0
Fax: +49 6257 9311-8230

Email: international@reineckervision.de
www.reineckervision.com

SRN: DE-MF-000025998

In case service is necessary, please contact your authorized distributor.

Reinecker Vision GmbH
Zentrale

Vertrieb, Kundenberatung:
Sandwiesenstraße 19
64665 Alsbach-Hähnlein

Kundendienst:
Erlenweg 3
64665 Alsbach-Hähnlein

Tel.: 06257 93 11-0
Fax: 06257 93 11-8008

Email: info@reineckervision.de
www.reineckervision.de

SRN: DE-MF-000025998

Bitte wenden Sie sich bei Fragen oder einem Servicefall direkt an unser Hauptwerk in Alsbach-Hähnlein.

Bei im Ausland erworbenen Produkten kontaktieren Sie im Servicefall bitte Ihren dort ansässigen Händler.

Version 1.7, Stand 01/25, Art.-Nr. 00010214
Subject to change.

REINECKER