User manual

topolino flex *2K* V3.1

EN



Please read this user manual carefully prior to installation, use and maintenance for your own safety and in order to avoid damages on your system.

REINECKER

Reinecker Vision GmbH
Sandwiesenstraße 19 · 64665 Alsbach-Hähnlein
Email: info@reineckervision.de · www.reineckervision.de
SRN: DE-MF-000025998

EU-Konformitätserklärung
EU-Declaration of conformity

Wir erklären in alleiniger Verantwortung für alle unsere Systeme, dass diese mit den folgenden Richtlinien übereinstimmen.

Das opto-elektronische Lesesystem ist ein Medizinprodukt zum Vergrößern von Text- und Bildvorlagen. Stark sehbehinderte Menschen kompensieren damit ihre Sehbeeinträchtigung.

We declare under our sole responsibility that the systems, which have been brought into the market by us, meet the requirements of the following regulations.

This opto-electronic reading system is a medical device for magnifying text and pictures. By using this device, humans compensate for their visual impairment.

topolino flex *2K* V3.1

(Art.-Nr.: TOFL2K31)

Basis UDI-DI: 42556338CAMUQ

Richtlinie 2017/745/EU
Medical Device Regulation (MDR)
Risikoklasse I nach Anhang VIII Regel 13
CE Konformität nach Anhang IX und
RoHS II (Richtlinie 2011/65/EU)

Regulation (EU) 2017/745
concerning medical devices risk class I
according to Annex VIII standard 13
CE conformity of Annex IX and
RoHS II Regulation (EU) 2011/65

Die CE– Kennzeichnung auf dem Gerät dokumentiert diese Übereinstimmung.
The CE mark on the system points out this accordance.

Alsbach-Hähnlein,

01.09.2024

Ort und Datum der Ausstellung
Place and date of issue

M. Reinecker Geschäftsführer
M. Reinecker General Manager

Name und Unterschrift des Befugten
Name and signature of the authorized person

Contents

I. General information 6
Information on electromagnetic compatibility (EMC) 6
Storage of the instructions for use 6
Product description 6
Medical device 7
Purpose 7
Evolution and lifetime of products 7
Safety advice 7
Combination with other products 7
Precautions by alteration of the performance of the systems 7
Reinstatement and installation 8
Cleaning of the system 8
Special advice for transport and storage 8
Disposal of the unit according to (EU) 2012/19 8
Power supply 8
Safety instruction 9

II. Instructions for the camera reading system 10
Scope of delivery 10
Accessories (optional) 10
Setting up the camera reading system 10
Connection to power supply 12
- USB output (type A) 12
- HDMI output (type A) 12

Description of the operating elements on the device 13
- Power switch On/Off 13
- Lighting on/off/dimming 13

Operating elements Infrared remote control 14
- Function keys/navigation keys in the menu 15
- Menu button 15
- Color mode 15
- Reset function 15
- Manual focus 15
- Brightness 15
- Saturation/contrast 15

Tuning the remote control to defined devices 16
Controls on the back of the camera 16
- Overview mode 16
- Zoom + / - 17
- Assign image mirroring with the zoom buttons 17

Commissioning the camera reading system 17
Mains operation 17
Switching on the camera reading system 17
Exiting and switching off the camera reading system 17
Automatic saving of the device settings 17
Replacing the lighting 17
Attention: Note on the plug-in power supply unit 17
Switching from document to distance mode 18
Position document mode 18
Position distance mode 18
Description of the menu settings 19
Menu selection 19
Overview: Main Menu 19
Select menu item or change setting 19
Exit menu 19
Explanation of the menu content 20
Menu settings 20
Troubleshooting 24
PC Software Installation 25
System requirements 25
Operating systems 25
Recommended PC hardware 25
Installing the Supernova software 26
Connecting the camera system to the PC or notebook 26
Select camera system in Supernova or Zoomtext 26
Technische Details 26
Warranty Information 27
Notes 28

I. General information

Important instructions for operating the topolino flex *2K* camera reading system! Read these instructions before using the device!

Information on electromagnetic compatibility (EMC)

opto-electronic visual aid is suitable for use in all establishments, including domestic establishments and those directly connected to the public low-voltage power supply network that supplies buildings used for domestic purposes.

The opto-electronic visual aid is intended for use in the electromagnetic environment specified. The customer or the user should assure that it is used in the specified environment.

The opto-electronic visual aid uses RF energy exclusively for its own function. Therefore, the emission of high-frequency interference is very low and the possibility of interfering with other devices operating in the vicinity is unlikely. Nevertheless, it should be borne in mind that operating the device together with other devices can lead to interference with the device or other devices. Care should therefore be taken to ensure that the device is not positioned directly next to or on top of another device.

If an arrangement of the opto-electronic visual aid in close proximity to medical measuring devices cannot be avoided, the user of these measuring devices must be made aware that it is necessary to observe the device results in order to check the intended use of the device in the selected arrangement. Electronic devices are sensitive to electrical discharge and high-frequency electromagnetic fields.

Caution: To avoid interference to the device from RF disturbances (e.g. microwaves), the user should maintain a minimum distance of one meter from portable and mobile RF telecommunications equipment.

Further information can be found under “Safety advice” on page 7.

Storage of the instructions for use

The operating instructions are an important part of the camera reading system and as such must be kept in a safe place.

Product description

The device is an opto-electronic camera reading system for enlarging text and images for professional and long-term private use. The images are captured by the integrated camera and displayed on a directly connected monitor or via a PC or notebook system.

- space-saving 2K reading/distance camera with the highest image resolution,
- up to 2048 x 1152 in 16:9 format and
  2048 x 1280 in 16:10 format (only via HDMI connection)
- approx. 19x lossless magnification
- magnification in document mode from approx. 0.8x to 80x (depending on the monitor size)
- sharp displaying of more than one DIN A3 page
- overview mode via crosshair view
- incl. remote control with large control buttons

Medical device

The device is a medical device of risk class I and complies with Directive 2017/745/EU, Annex VIII, Rule 13. If the device is used outside the EU member states, the respective country-specific directives must be observed.

Purpose

This opto-electronic camera reading system is a medical device to assist with the reading and magnifying of printed text and pictures. Visually impaired people can compensate for their loss of visual acuity by using this device.

Evolution and lifetime of products

The Medical Device Directive regulates by law that manufacturers of medical devices shall determine a period of safety operation of a product. We fulfill hereby legal requirements and determine - for formal reasons - a period of three years after date of first purchase.

Note:

The mentioned life span does not reflect the complete life span of the topolino flex *2K*. It is rather an indication on when the product might be obsolete and substitution might be recommended due to new product developments.

Safety advice

topolino flex *2K* has to be installed in closed and dry rooms only. Do not plug topolino flex *2K* into an electrical circuit that is also being used for any life sustaining or support systems.

The device may not be used in the patients environment. This device should not be operated in explosion-endangered environments. This opto-electronic device should only be installed in conjunction with modern electrical circuitry. The openings in the casing ensure optimum cooling and must not be covered.

Combination with other products

Warning: This camera reading system must not be located directly besides, next or on top of another medical device. If the device is used near another electrical device, monitor the other device to ensure that it is working properly.
In case of doubt please contact Reinecker Vision GmbH or any licensed distribution-partner.

Precautions by alteration of the performance of the systems

Stop using the reading device if technical features or performances should change. Switch the device OFF and disconnect the power supply from the mains wall socket. Refer directly to your authorized dealer or to Reinecker Vision GmbH Service Center.

Reinstatement and installation

This device may be technically maintained and reconditioned by Reinecker Vision GmbH only or by an authorized technician. Reinstatement may only take place after the system has been cleaned and safety checked.

Cleaning of the system

- topolino flex *2K* has to be disconnected from the power supply before cleaning.
- Clean the system with a slightly damp cloth and a mild household detergent.
- Interior of device must NOT come in contact with liquids.

Special advice for transport and storage

For reasons of safety, the unit must only be transported and stored in the original packing. The unit must be stored in dry and closed rooms in the original packing. The following conditions for transport and storage have to be respected:

- Air pressure 700 bis 1000 hPa
- Temperature range +5°C to + 50°C
- Relative air humidity 30% to 80%

Disposal of the unit according to (EU) 2012/19

topolino flex *2K* contains of electronic components. To avoid damage to the environment, the country-specific rules have to be respected.

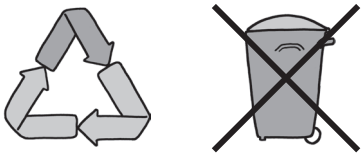

Power supply

Only use the original power supply which is included in the delivery by Reinecker Vision GmbH.

Caution:
The use of any other equipment might lead to an increased electromagnetic emission and to a product damage.

Safety instruction

Please respect the following safety instructions:

1. Do not plug the AC adapter into a faulty electrical outlet. Doing so may cause electrical shock or fire.
2. Do not touch the AC adapter with wet hands.
3. Only use the original power supply which is included in the delivery by Reinecker Vision GmbH. The use of any other equipment might lead to a product damage.
4. Do not expose the system to direct sunlight or to very hot or cold environment, as this would harm the picture quality.
5. Do not operate this device below +5°C or above +40°C.
6. No liquids must reach the interior of the system. Only operate the device in a dry environment.
7. The device may not be operated next to medical devices (patients environment).
8. Do not lean on the system and do not put heavy objects on it as the system could be damaged.
9. Do not try to repair or to dismantle the system by your own. This would automatically void the warranty. If you need any technical assistance please get in contact with the local distributor or with Reinecker Vision GmbH.
10. Always switch OFF the system and disconnect it from the power supply before cleaning it. Only use a soft and slightly damped cloth. Only use a mild household detergent. Do not use alcohol containing or strong detergents.

II. Instructions for the camera reading system

Scope of delivery

- Camera reading system topolino flex *2K*
- Remote control
- Plug-in power supply 12V DC / 5.0 A incl. adapter cable (country-specific)
- USB 3.0 cable
- Instructions for use
- Service Information

Accessories (optional)

- HDMI cable
- Mobile comfort xy-table (available in different versions) for more comfort when reading
- HDMI-SWITCH (2 inputs/1 output) with foot switch

Setting up the camera reading system

topolino flex 2K finds you already fully assembled and only needs to be attached to a stable table with the bracket.

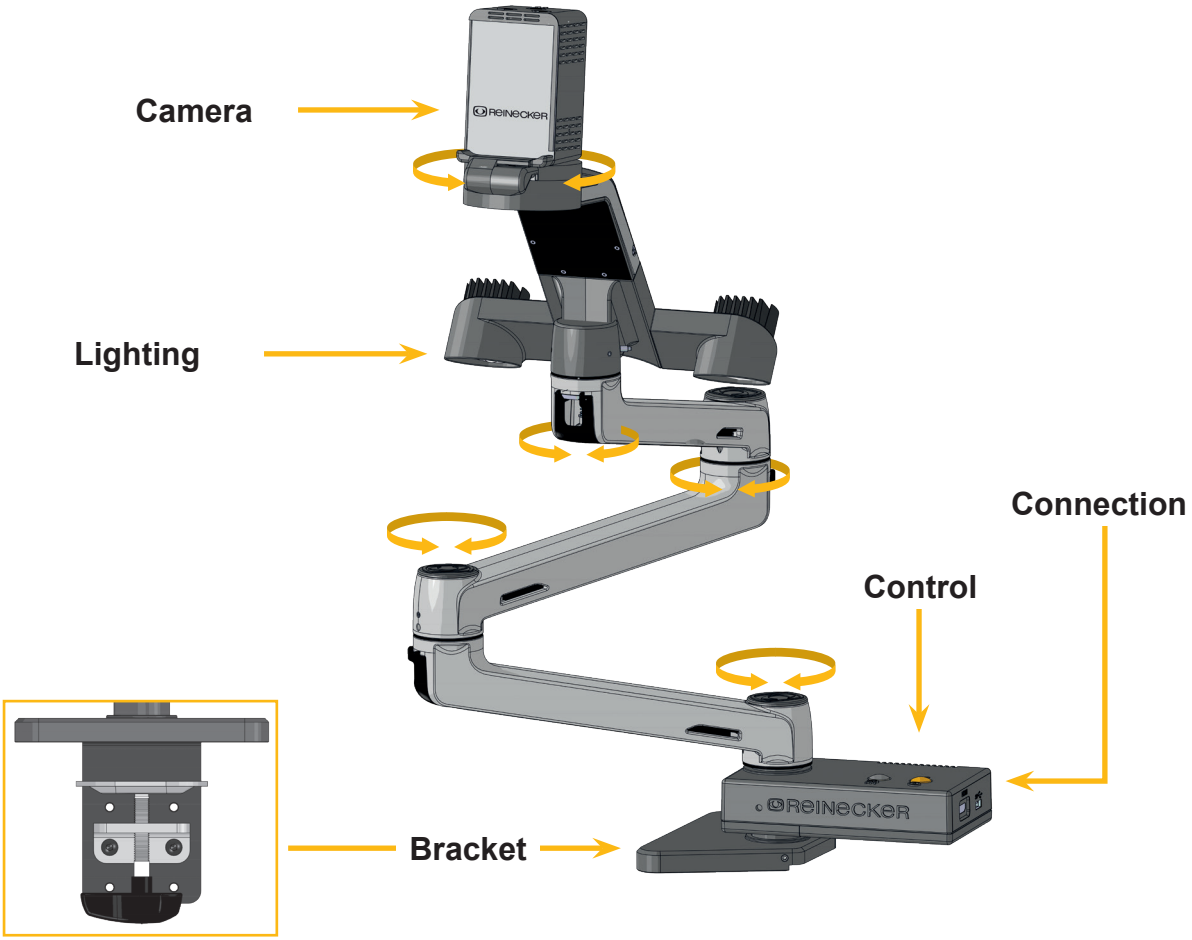

The camera reading system is already equipped with a bracket and can be easily attached to almost any table. The max. thickness for a tabletop is 4.5 cm; by turning the angle bracket the max. thickness increases to about 8.0 cm.

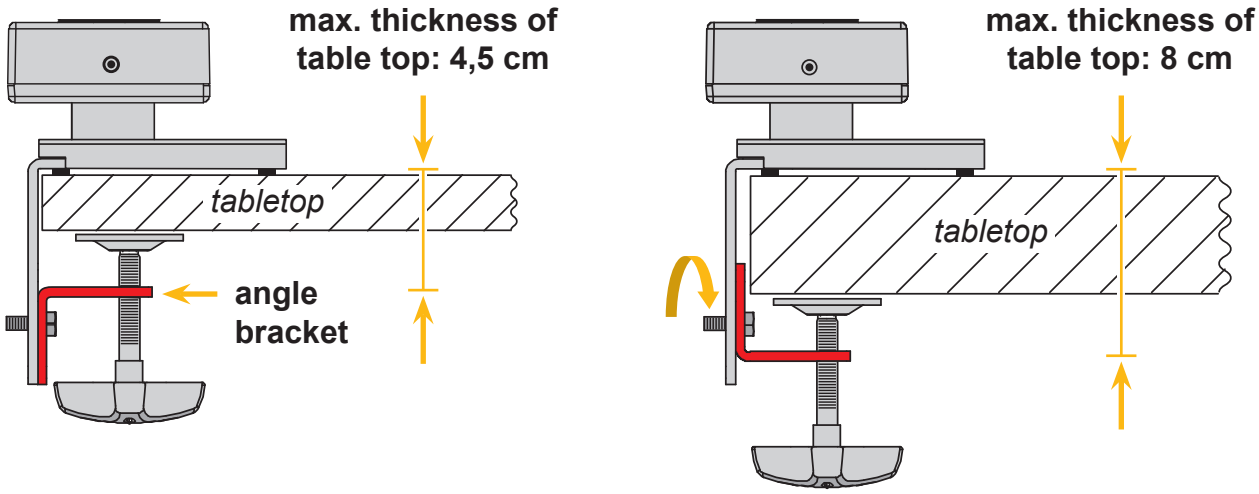

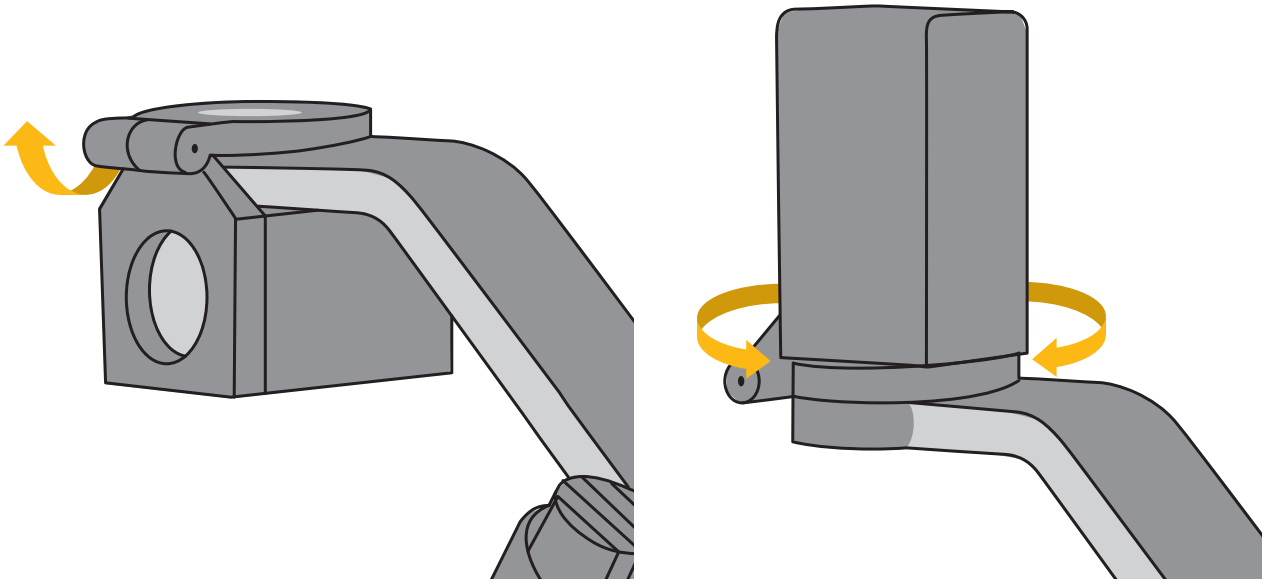

To bring the camera into the final reading position, the camera must be positioned 270° upwards as shown in the illustration above and aligned with the reading material. The camera is aligned exactly to the zero position by using a perceptible snap-in function.

Connection to power supply

Connect the enclosed plug-in power supply to an external power supply and connect the DC plug to the 12V DC socket.

Attention: The included power supply is exclusively for operating the camera reading system. Do not use any other plug-in power supply or cable.

The device is now ready to use.

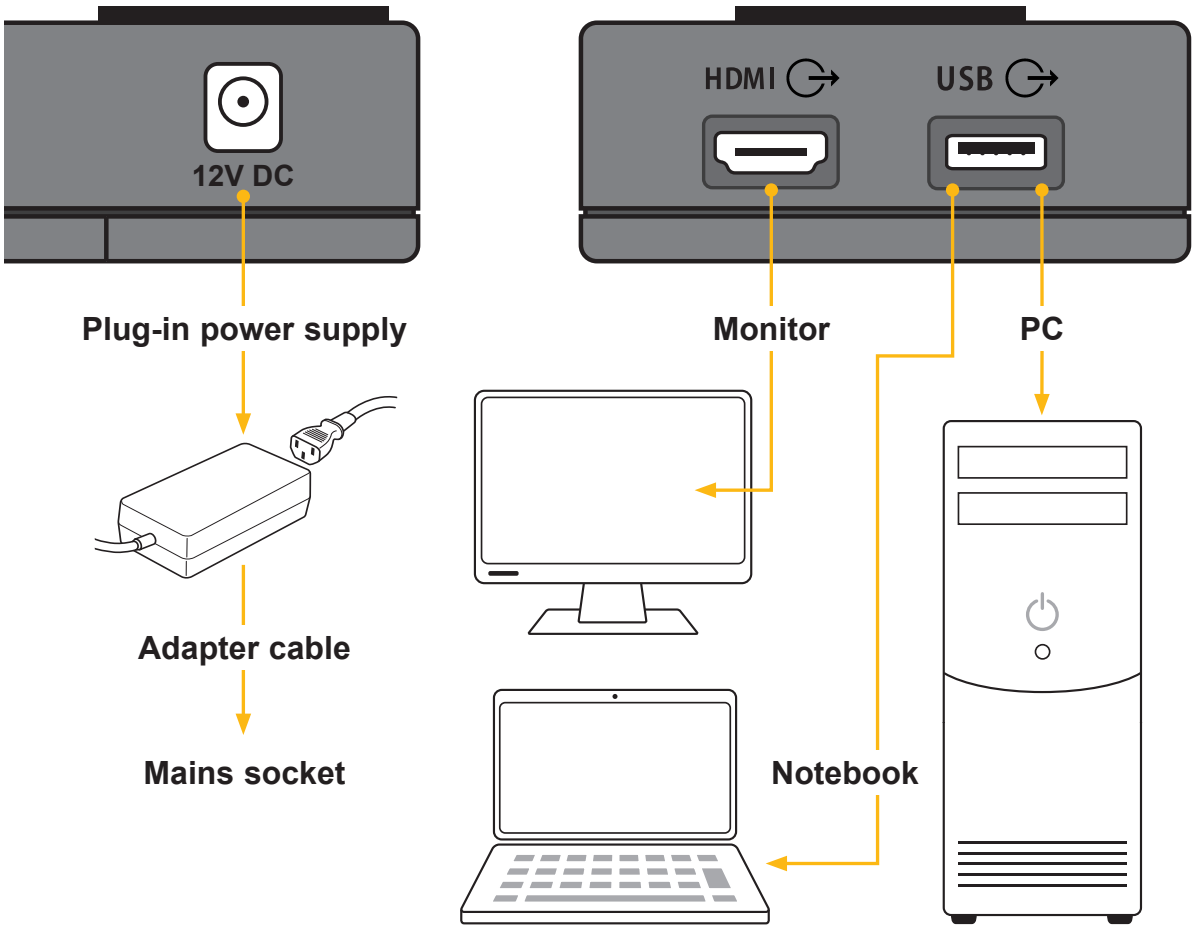

USB output (type A)

USB 3.0 connection for connecting a PC or notebook.

HDMI output (type A)

Connection for external monitor with HDMI technology.

Description of the operating elements on the device

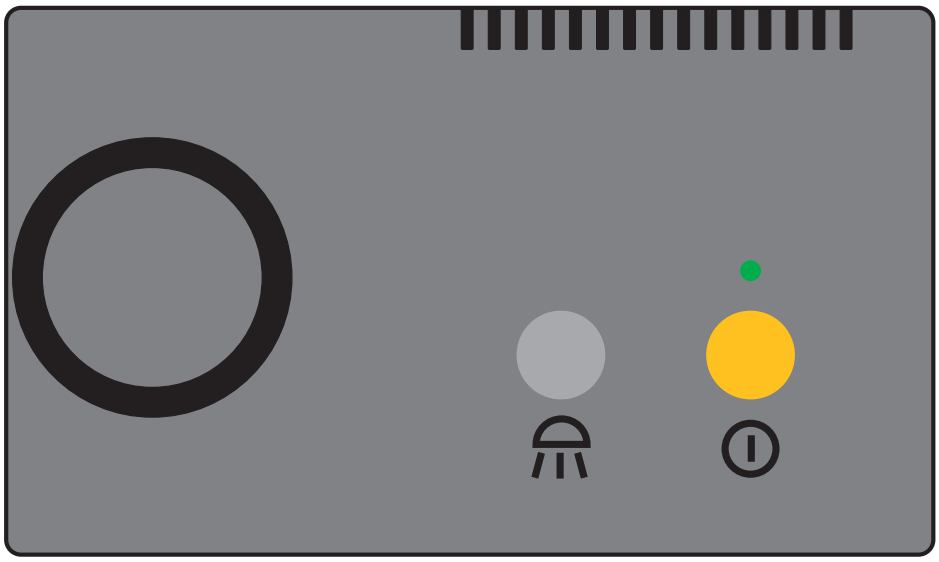

Power switch On/Off

Switches the system on or off. When the device is switched on, the green LED lights up.

The last settings used are automatically saved when the device is switched off.

When the camera reading system is switched back on, the last saved settings are reactivated.

Lighting on/off/dimming

The lighting can be switched on or off by briefly pressing the grey operating button.

By pressing and holding the black operating button, the LED can be dimmed continuously brighter and darker. The selected illuminance is saved when the operating button is released.

Note:
The latest chosen illuminance is set, when the light is switched on again.

Operating elements Infrared remote control

All camera functions are set using the remote control.

Note: The remote control works with infrared - when using the remote control, always point it in the direction of the camera reading system.



Function buttons (in document mode)

Minus button: Reduce magnification

Up arrow key: AF mode On/Off

Plus button: Increase magnification

Down arrow key: Ruler On/Off

Navigation in the menu

Menu button On/Off

Focus manual remote

Brightness minus

Contrast minus for false colors

Color saturation minus for true color display

Image limitation minus within mask function

Line ruler down

Function buttons (in distance mode)

Minus button: Reduce magnification

Up arrow key: AF mode On/Off

Plus button: Increase magnification

Down arrow button: automatic aperture control (Auto-Exposure) On/Off

Switching from true colors to false colors

Reset function

Focus manual close

Brightness plus

Contrast plus for false colors

Color saturation plus for true color display

Image limitation plus within mask function

Line ruler up

Function keys/navigation keys in the menu



Function button
In the menu: Change settings



Function button
In the menu: Select top menu item



Function button
In the menu: Change or confirm settings



Function button
In the menu: select next menu item



Menu button

Press the button to switch the menu on/off.



Color mode

Switching the color displays (true colors and false colors pos./neg.)



Reset function

Press and hold the Color mode button for approx. 4 seconds until the reset starts. The system is then reset to the factory settings.

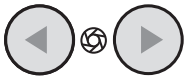

Manual focus

Press these buttons to adjust the focus (image sharpness).

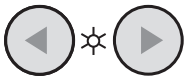

Brightness

Press these buttons to adjust the brightness (light intensity) of the image display.

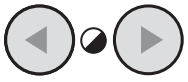

Saturation/contrast

Pressing these buttons changes the image contrast or color saturation.

In true color mode: control of color saturation

In false color mode: regulation of the image contrast

Note:

When the ruler function is switched on, these buttons are used to set the ruler position.

When the mask function is switched on, these buttons are used to set the mask window.

Tuning the remote control to defined devices

In order to operate several topolino systems in one room, it is possible to assign up to 12 different codes to the remote control.

To set a code, press one of the following combinations:

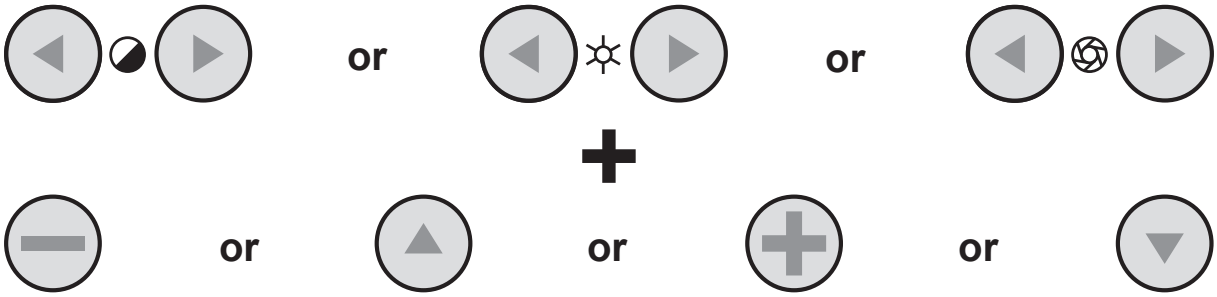

To confirm the respective code, press the Zoom +/- button on the camera head at the same time.

Controls on the back of the camera

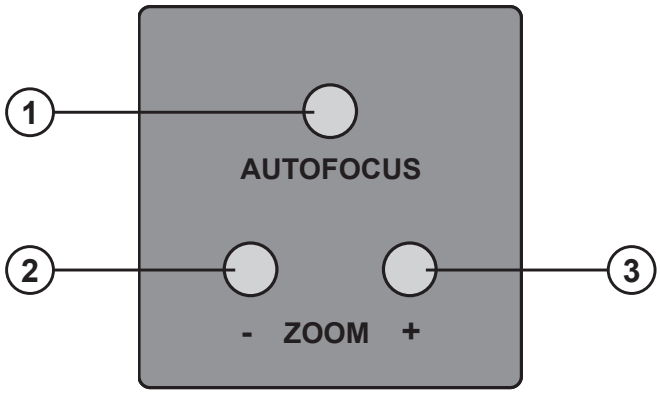

Autofocus

Press the AUTOFOCUS button **(1)** to switch the camera‘s autofocus on or off. The status of the autofocus function is displayed in the lower left area of the screen for approx. 4 seconds if the text overlay is switched on. When autofocus is switched on, the camera automatically adjusts the focus within its image scale.

Overview mode

If you are working with a large magnification and no longer know which area of the reading template or room you have magnified, this function gives you an overview of the magnified area.

At high magnification, press and hold the AUTOFOCUS button **(1)** until the “Overview mode” display appears in the lower left area of the monitor and the image on the monitor is reduced in size. The crosshairs in the middle of the image provide an overview of which area of the image is currently magnified.

If you release the AUTOFOCUS button **(1)**, the originally selected magnification is displayed again.

Zoom + / -

The magnification can be adjusted continuously using the **(3)** Zoom + / **(2)** Zoom - buttons.

Assign image mirroring with the zoom buttons

The image display on the monitor can be mirrored horizontally.

To do this, press and hold the **(3)** Zoom + and **(2)** Zoom - buttons until "Mirror ON" appears briefly and the image is mirrored.

If you want to return to normal mode, press and hold the two buttons again until "Mirror OFF" appears and the picture is displayed normally again.

Commissioning the camera reading system

Mains operation

For mains operation, ensure that the enclosed plug-in power supply unit is connected to the mains and to the power supply plug (12 VDC) of the camera reading system.

Switching on the camera reading system

Press the On/Off switch to switch on the camera reading system. If the green LED lights up continuously, the system is ready for operation.

Exiting and switching off the camera reading system

Press the On/Off switch to switch off the camera reading system.

Automatic saving of the device settings

All the last device settings used are active when the device is switched back on.

Replacing the lighting

The camera reading system is equipped with powerful LED lighting. If the lighting needs to be replaced, this must be carried out by an authorized specialist or by Reinecker Vision GmbH customer service.

Attention: Note on the plug-in power supply unit

Always use the plug-in power supply included in the scope of delivery to operate the camera reading system!

Switching from document to distance mode

Position document mode

Please position the camera head vertically and rotate it if necessary so that the camera is facing the reading template in the correct position.

This camera position is suitable for reading and viewing originals, e.g. documents. The camera lighting switches on depending on the presetting.

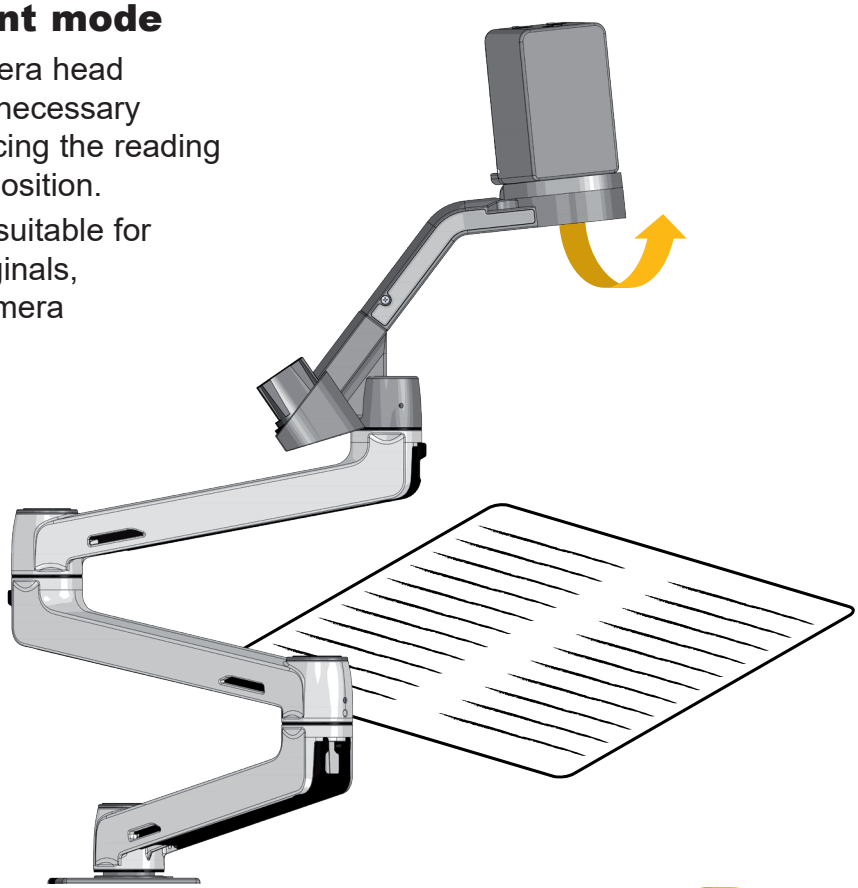

Position distance mode

Please swivel the camera head 90º in a horizontal position.

The camera lighting switches off automatically.

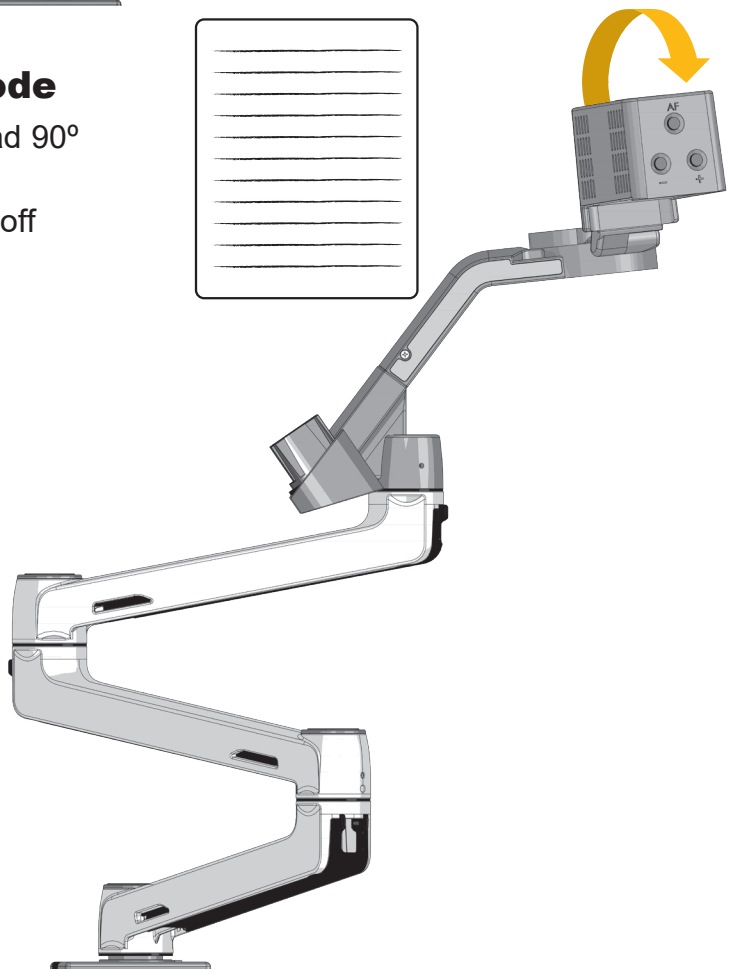

Note:

The swivelling range of the camera in document and distance mode is 270°.

Description of the menu settings

Menu selection

Press the Menu button on the control panel to enter/exit the menu.

Overview: Main Menu

The main menu shows the different options to set individualize your system:

Main Menu	
Brightness	+50
Contrast	+50
Colour Saturation	- 30
Ruler / Mask	OFF
Ruler / Mask Settings...	
AF Modus	Continuous / Zoom
Reset to Factory Settings	
Recall User Settings...	
Advanced Settings...	
Exit	

Please note: If the screen remains black, it could be due to an incorrectly set resolution (TFT monitors must not be operated at a higher resolution than their native resolution). In this case please reset the system via the color mode button (please see page 14-15).

Select menu item or change setting

Please select menu item with the buttons or and change or confirm with -button.

Exit menu

Please move onto menu item “Back” or “Exit” with buttons or and press -button to exit menu. Alternatively press button to directly exit the menu.

Explanation of the menu content

The image shows in detail how the menu is structured.

Main Menu	← Menu level 1
Advanced Settings	← Menu level 2
Special Settings	← Menu level 3
Customize Buttons	← Menu level 4
Function	**adjustment range** | explication

Menu settings

Main Menu	
Brightness	**Brightness adjustment range from -50 to +50**
Contrast	**Brightness adjustment range from -50 to +50**
Color Saturation	**Brightness adjustment range from -50 to +50**
Ruler / Mask	**OFF** | Lineal und Maske ausblenden **Ruler** | activate line marker **Mask** | activate shadowing

Main Menu	
Ruler / Mask Settings	
Ruler / Mask	**OFF** | deactivate line marker and shadowing **Ruler** | activate line marker **Mask** | activate shadowing
Ruler Position	**0 to 100** | adjust line marker position
Mask Position	**0 to 100** | adjust shadowing
Ruler Mode	**Horizontal** | Lineal horizontal ausrichten **Vertikal** | Lineal vertikal ausrichten
Mask Mode	**Left/Right** | Shadowing left/right; shadowing up to 50% **Top/Bottom** | Shadowing top/bottom; shadowing up to 50% **Left/Right FS** | Shadowing left/right; shadowing up to 90% **Top/Bottom FS** | Shadowing top/bottom; shadowing up to 90% **Full-Screen** | Shadowing covers whole screen
Mask Transparency	**50%** | **25%** | **0%**

Main Menu	
Ruler / Mask Settings	
Ruler Color	
Red	adjustment range from 0 to 31
Green	adjustment range from 0 to 31
Blue	adjustment range from 0 to 31
Return	

Main Menu	
AF Mode	Semi-Automatic | Semi-Autom. + Zoom | Continuous/Zoom
Reset to Factory Settings	Return to factory settings
Recall User Settings	Return to individual settings
Advanced Settings	*(see overview)*
Exit	

Overview:	Advanced Settings	
	Color Combination Setup	
	Image Rotation	0°
	Monitor Brightness	100
	Language	English
	Perform White Balance	
	White Balance Mode	Auto
	Sharpness Settings	
	OSD Messages	OFF
	Special Settings	
	Return	

Main Menu	
Advanced Settings	
Color Combination Setup	
Color Combination 1-6	
Mode	Disabled | Full Color | Grayscale | False Color
Foreground	Black | Red | Green | Blue | Yellow | Magenta | Cyan | White | User 1 | User 2
Background	Black | Red | Green | Blue | Yellow | Magenta | Cyan | White | User 1 | User 2
Swap Fore-/ Background	Press button “plus (+)” to switch between the two views (positive and negative).
Return	

Main Menu	
Advanced Settings	
Color Combination Setup	
User colors	
User color 1 - Red	adjustment range from 0 to 31
User color 1 - Green	adjustment range from 0 to 31
User color 1 - Blue	adjustment range from 0 to 31
User color 2 - Red	adjustment range from 0 to 31
User color 2 - Green	adjustment range from 0 to 31
User color 2 - Blue	adjustment range from 0 to 31
Return	

Main Menu	
Advanced Settings	
Image Rotation	0° | +90° | 180° | -90°
Monitor Brightness	adjustment range from 37 to 100
Language	English | German | French | Norwegian
Perform White Balance	Press button “plus (+)” to perform white balance
White Balance Mode	Auto | One-Push *(please see: perform white balance)*

Main Menu	
Advanced Settings	
Sharpness Settings	
Reading Mode:	
Real Colour Sharpness	adjustment range from 0 to 24
False Colour Sharpness	adjustment range from 0 to 24
Room Mode:	
Real Colour Sharpness	adjustment range from 0 to 24
False Colour Sharpness	adjustment range from 0 to 24
Return	

Main Menu	
Advanced Settings	
OSD Messages	ON | OFF
Special Settings	*(see overview)*
Return	

Overview:	Special Settings	
	Zoom Extension	**ON**
	Max. Digital Zoom	**3.5x**
	Resolution...	**1080p/60**
	Sensor Setup...	
	Reset to Factory Settings	
	Expert Settings	
	Monitor size	**19"**
	Return	

Main Menu	
Advanced Settings	
Special Settings	
Zoom Extension	**ON** | **OFF**
Max. Digital Zoom	**OFF** | adjustment range from 1,5x to 15x

Main Menu		
Advanced Settings		
Special Settings		
Resolutions 1080p/60		
4 : 3:		**High Resolutions**
UXGA60	**(1600 x 1200)**	resolution to be confirmed
16 : 9:		**High Resolutions**
1080p60	**(1920 x 1080)**	resolution to be confirmed
2K60 16 : 9	**(2048 x 1152)**	resolution to be confirmed
16 : 10:		**High Resolutions**
WUXGA/60Hz	**(1920 x 1200)**	resolution to be confirmed
2K56 16 : 10	**(2048 x 1280)**	resolution to be confirmed
Low Resolutions...		Press button “plus (+)” to switch to the next option
Return		

4 : 3:		**Low Resolutions**
XGA/60Hz	**(1024 x 768)**	Resolution to be confirmed
SXGA/60Hz	**(1280 x 1024)**	Resolution to be confirmed
16 : 9:		**Low Resolutions**
WXGA2/60Hz	**(1366 x 768)**	Resolution to be confirmed
16 : 10:		**Low Resolutions**
WXGA+/60Hz	**(1440 x 900)**	Resolution to be confirmed
WSXGA+/60Hz	**(1680 x 1050)**	Resolution to be confirmed
High Resolutions...		Press button “plus (+)” to switch to the next option
Return		

Main Menu	
Advanced Settings	
Special Settings	
Sensor Setup...	
Shutter False Col. Read	**1/100 | 1/120 | 1/150 | 1/200 | 1/250**
Shutter Real Col. Read	**1/100 | 1/120 | 1/150 | 1/200 | 1/250**
Shutter False Col. Room	**1/20 | 1/25 | 1/30 | 1/33 | 1/50 | 1/60 | 1/75**
Shutter Real Col. Room	**1/20 | 1/25 | 1/30 | 1/33 | 1/50 | 1/60 | 1/75**
Noise Red. F. Col. Read	**OFF | adjustment range from 1 to 4**
Noise Red. R. Col. Read	**OFF | adjustment range from 1 to 4**
Noise Red. F. Col. Room	**OFF | adjustment range from 1 to 4**
Noise Red. R. Col. Room	**OFF | adjustment range from 1 to 4**
Return	

Main Menu	
Advanced Settings	
Special Settings	
Store User Settings	Press control button “plus (+)” to save individual user settings
Expert Settings	Access only by authorized service
Monitor size	**Auto | 19" | 22" | 24"**
Return	

Troubleshooting

Problem	Solution
No image is shown.	Check the mains connection, the cable connection to the monitor and that all relevant systems are switched ON or activated.
Screen is dark.	Check the brightness and contrast settings of the camera/monitor.
True colour is not displayed correctly.	Check your reading material, colour mode setting, brightness, colour saturation and camera lighting.

PC Software Installation

To show the topolino camera image on your PC or notebook, a magnification software e.g. SuperNova (from version 16) or Zoomtext (from version 10) is needed.

If no magnification software is installed on your PC or notebook yet then install the PC software free of charge from the Internet “SuperNova Magnifier & Speech”. (demo version)

https://www.reineckervision.de/medien/software-testversionen/

After the software installation SuperNova will provide you with all the camera features and their viewing modes (such as image splitting) and PC image enhancement features. The camera functions can be used permanently with SuperNova as of version 16.05. For the first 30 days you can also use all other features of SuperNova. After the 30 days, only the camera functions are available.

If a full version of Zoomtext or “Dolphin SuperNova” has been purchased, this must be activated via Internet with the appropriate activation code.

Please note:

- For the time of the software installation, you may need administrator rights from your IT department.
- Your computer should meet the system requirements.
- Before installing the software, we recommend a Windows Update to make sure your operating system is up to date.

System requirements

Operating systems

- Windows 7 (all versions) 32 and 64 bit
- Windows 8.1 (all versions) 32 and 64 bit
- Windows 10 (all versions) 32 and 64 bit

Recommended PC hardware

- **Processor:** 1.5 GHz or higher, compatible with SSE2 command set support
- **RAM:** 4GB or higher
- **Hard disk:** 5GB free disk space for example for “Dolphin SuperNova” magnification (Magnifier)
- **Graphic card:** 512MB RAM graphic card space with DirectX 9.1 support
- **Sound card:** If required Windows compatible sound card for example for “Dolphin SuperNova” magnification with voice output
- **USB ports:** 1 x USB 3.0 for the topolino camera system

Installing the Supernova software

Start your “Dolphin installation program” software with a double-click and carry out the following steps:

1. Click on “Yes” to start the installation process.
2. After a few minutes, the symbol appears at the bottom right of the screen “file successfully extracted”.
3. Select the product language in the following window and confirm the language selection with “Next”.
4. First read through the “SuperNova Screen Enlargement” license agreement. Then click on “Accept” to start the installation.
5. Click on ‚Restart‘ before you run SuperNova. Once the computer has restarted, SuperNova will run automatically.

Connecting the camera system to the PC or notebook

1. After restarting the PC or notebook, connect the camera system to an active USB 3.0 interface using the USB 3.0 cable supplied.
2. Switch on the camera reading system so that the driver installation can take place, whereby an Internet connection may be required.

Select camera system in Supernova or Zoomtext

1. After successful installation, start the Supernova or Zoomtext software.
2. Under the Supernova or Zoomtext software, select the “USB Capture HDMI” camera system or device.
3. The camera system can now be used with the corresponding functions under the Supernova or Zoomtext software. Please refer to the Supernova or Zoomtext documentation for further information.

Technische Details

- **Camera:** *2K* read/space camera with maximum image resolution, up to 2048 x 1152 in 16 : 9 format
  2048 x 1280 in 16 : 10 format
  (only via HDMI connection)
  approx. 19x lossless magnification
  Magnification in document mode
  from approx. 0,8 - 80x (depending on the monitor size)
- **Autofocus:** Comfort autofocus, can be switched off
- **Color mode:** True color, high-contrast false color and others
  User-definable color representations
- **Product weight:** approx. 4,5 kg
- **Dimensions:** (BxH) approx. 24x63 cm,
  range of action approx. 40 to 85 cm.
- **Power supply:** external plug-in power supply
  Input: 100-240 VAC 50/60 Hz / 1.5 A
  Output: 12V DC 5.0 A
- **Power consumption:** approx. 60 watts

Warranty Information

1. Reinecker Vision GmbH grants a warranty of 24 months against defects in manufacture counted from date of invoice ex Reinecker Vision GmbH.
2. All parts that have been replaced when repairing the unit will automatically become property of Reinecker Vision GmbH.
3. Damage caused by improper use or by non-compliance with the operating instructions will result in the invalidation of the warranty.
4. Interventions from persons other than Reinecker Vision GmbH authorised specialists may lead to invalidity of warranty.
5. Partial warranty is valid for light sources serving to illuminate the reading object, batteries and other parts subject to wear and tear.
6. If a warranty claim is necessary, the system has to be returned to the manufacturer in Alsbach-Hähnlein or to your authorized dealer in the original packaging including all components. The manufacturer does not carry the cost for transport, packaging and insurance.

Phone number: +49 6257 9311-0

View our General Terms and Conditions.

Your authorized distributor:

Notes

Type:	topolino flex 2K **(TOFL2K31)**
Serial number:	
Manufacturer:	Reinecker Vision GmbH
Final examination:	
Power supply:	100 VAC – 240 VAC 50-60 Hz
With plug-in power supply:	12V DC/5000mA
Power consumption:	max. 60 watts

Reinecker Vision GmbH
International Contact

sales department, customer relations:
Sandwiesenstraße 19
DE-64665 Alsbach-Hähnlein

customer service:
Erlenweg 3
DE-64665 Alsbach-Hähnlein

Tel.: +49 6257 9311-0
Fax: +49 6257 9311-8230

Email: international@reineckervision.de
www.reineckervision.com

SRN: DE-MF-000025998

In case service is necessary, please contact your authorized distributor.

Reinecker Vision GmbH
Zentrale

Vertrieb, Kundenberatung:
Sandwiesenstraße 19
64665 Alsbach-Hähnlein

Kundendienst:
Erlenweg 3
64665 Alsbach-Hähnlein

Tel.: 06257 93 11-0
Fax: 06257 93 11-8008

Email: info@reineckervision.de
www.reineckervision.de

SRN: DE-MF-000025998

Bitte wenden Sie sich bei Fragen oder einem Servicefall direkt an unser Hauptwerk in Alsbach-Hähnlein.

Bei im Ausland erworbenen Produkten kontaktieren Sie im Servicefall bitte Ihren dort ansässigen Händler.

Version 1.0, Stand 02/25, Art.-Nr. 00020615
Änderungen und Druckfehler vorbehalten.

REINECKER