User manual

topolino capo 2 K

EN



Be sure to read the operating instructions before commissioning - use - maintenance. This will protect you and prevent damage to your appliance.

REINECKER

Reinecker Vision GmbH
Sandwiesenstraße 19 · 64665 Alsbach-Hähnlein
Email: info@reineckervision.de · www.reineckervision.de
SRN: DE-MF-000025998

Konformitätserklärung
Declaration of conformity

Wir erklären in alleiniger Verantwortung für alle unsere Systeme, dass diese mit den folgenden Richtlinien übereinstimmen.

Das opto-elektronische Lesesystem ist ein Medizinprodukt zum Vergrößern von Text- und Bildvorlagen. Stark sehbehinderte Menschen kompensieren damit ihre Sehbeeinträchtigung.

We declare under our sole responsibility that the systems, which have been brought into the market by us, meet the requirements of the following regulations.

This opto-electronic reading system is a medical device for magnifying text and pictures. By using this device, humans compensate for their visual impairment.

topolino capo 2K

(Art.-Nr.: TOCA2K01)

Richtlinie 2017/745/EU
Medical Device Regulation (MDR)
Risikoklasse I nach Anhang VIII Regel 13
CE Konformität nach Anhang IX und
RoHS II (Richtlinie 2011/65/EU)

Regulation (EU) 2017/745
concerning medical devices risk class I
according to Annex VIII standard 13
CE conformity of Annex IX and
RoHS II Regulation (EU) 2011/65

Die CE– Kennzeichnung auf dem Gerät dokumentiert diese Übereinstimmung.
The CE mark on the system points out this accordance.

Alsbach-Hähnlein,

01.03.2023
Ort und Datum der Ausstellung
Place and date of issue

M. Reinecker Geschäftsführer
M. Reinecker General Manager

Name und Unterschrift des Befugten
Name and signature of the authorized person

Contents

I. General information....6
Notes on electromagnetic compatibility (EMC)....6
Storing the instructions for use....6
Product description....6
Medical device....7
Intended use....7
Further development and service life of the products....7
Safety instructions....7
Combination with other medical devices....7
Precautionary measures when changing the performance of the product....7
Reuse/installation and maintenance....8
Appliance cleaning....8
Special notes on transportation and storage....8
Environmentally friendly disposal (Directive 2012/19/EU; ElektroG3)....8
Power supply....8
Safety instruction to prevent damage....9
II. Instructions for the camera reading system....10
Scope of delivery....10
Accessories (optional)....10
Setting up the camera reading system....10
Connection to power supply....12
USB output (type A)....12
HDMI output (type A)....12
Description of the operating elements on the device....13
Power switch On/Off....13
Lighting on/off/dimming....13
Operating elements Infrared remote control....14
Function keys/navigation keys in the menu....15
Menu button....15
Color mode....15
Reset function....15
Manual focus....15
Brightness....15
Saturation/contrast....15

Tuning the remote control to defined devices....16
Controls on the back of the camera....16
Autofocus....16
Overview mode....16
Zoom + /....17
Assign image mirroring with the zoom buttons....17
Commissioning of the camera reading system....17
Mains operation....17
Switching on the camera reading system....17
Exiting and switching off the camera reading system....17
Automatic saving of the device settings....17
Replacing the lighting....17
Attention: Note on the plug-in power supply unit....17
Switching from document to room mode....18
Position Document mode....18
Room mode position....18
Description of the menu functions....19
Call up menu selection....19
Overview: Main menu....19
Select menu item or change setting....19
Exit menu selection....19
Explanation of the menu display....20
Menu settings....20
Fault diagnosis....24
PC software installation....25
System requirements....25
Installing the Supernova software....26
Connecting the camera system to the PC or notebook....26
Select camera system in Supernova or Zoomtext....26
Technical details....26
Material defects and warranty provisions....27
Notes....28

I. General information

Important instructions for operating the topolino capo 2 K camera reading system! Read these instructions before using the device!

Information on electromagnetic compatibility (EMC)

The opto-electronic visual aid is suitable for use in all establishments, including domestic establishments and those directly connected to the public low-voltage power supply network that supplies buildings used for domestic purposes.

The opto-electronic visual aid is intended for use in the electromagnetic environment specified. The customer or the user should assure that it is used in the specified environment.

The opto-electronic visual aid uses RF energy exclusively for its own function. Therefore, the emission of high-frequency interference is very low and the possibility of interfering with other devices operating in the vicinity is unlikely. Nevertheless, it should be borne in mind that operating the device together with other devices can lead to interference with the device or other devices. Care should therefore be taken to ensure that the device is not positioned directly next to or on top of another device.

If an arrangement of the opto-electronic visual aid in close proximity to medical measuring devices cannot be avoided, the user of these measuring devices must be made aware that it is necessary to observe the device results in order to check the intended use of the device in the selected arrangement.

Electronic devices are sensitive to electrical discharge and high-frequency electromagnetic fields.

Caution: To avoid interference to the device from RF disturbances (e.g. microwaves), the user should maintain a minimum distance of one meter from portable and mobile RF telecommunications equipment.

Further information can be found under "Safety instructions" on page 7.

Storage of the instructions for use

The operating instructions are an important part of the camera reading system and as such must be kept in a safe place.

Product description

The device is an opto-electronic camera reading system for enlarging text and images for professional and long-term private use. The images are captured by the integrated camera and displayed on a directly connected monitor or via a PC or notebook system.

- Transportable 2K read/space camera with maximum image resolution, up to 2048 x 1152 in 16 : 9 format
  2048 x 1280 in 16 : 10 format (only via HDMI connection)
- approx. 22x lossless magnification
- Magnification in document mode from approx. 1 - 100x (depending on monitor size)
- sharp display of more than one DIN A3 page
- Overview mode via crosshair view
- incl. remote control with large operating buttons

Medical device

The device is a medical device of risk class I and complies with Directive 2017/745/EU, Annex VIII, Rule 13. If the device is used outside the EU member states, the respective country-specific directives must be observed.

Intended use

The opto-electronic camera reading system is a medical device for enlarging text and images. Severely visually impaired people can use it to compensate for their visual impairment.

Further development and service life of the products

The Medical Devices Directive stipulates that the manufacturer of a medical device must specify a period that describes the so-called safe operation. We thus fulfill a legal requirement and, for formal reasons, specify a period of three years from the date of purchase.

Note: The period stated has no relation to the actual possible period of use or maximum operating time of the systems at the user's premises. In this case, it is rather the period after which, in our current experience, the further development of the systems is so far advanced that the systems are considered technically obsolete and a new purchase may be advisable.

Safety note

The device may only be set up and operated in closed and dry rooms. In a medical environment, this device must not be connected to the same circuit as other life-support devices. The device must not be operated in the patient environment.

The appliance is not intended for use in potentially explosive atmospheres and may only be connected to a state-of-the-art circuit.

Combination with other medical devices

If the operator/user wishes to operate this device in conjunction with other medical devices that are used for life support, it is advisable to contact Reinecker Vision GmbH or one of its sales partners.

Precautionary measures when changing the performance of the product

If the technical characteristics of the appliance change, the appliance must be switched off and the mains plug disconnected. **The appliance must not be put back into operation in this condition.** Inform the Reinecker Vision GmbH Service Center or one of our partner companies immediately.

Reuse/installation and maintenance

The device may only be technically overhauled and reconditioned by Reinecker Vision GmbH or an authorized company. It may only be used again after a safety check and thorough cleaning.

Device cleaning

- Disconnect the appliance from the power supply before cleaning.
- Clean the appliance with a mild household cleaner and microfiber cloth.
- Do not allow any liquids to enter the appliance.

Special notes on transportation and storage

For safety reasons, this appliance may only be transported in its original packaging. It may only be stored in closed and dry rooms in its original packaging. The following storage and transportation conditions must be observed:

- Air pressure 700 to 1000 hPa
- Temperature range +5°C to +50°C
- Relative humidity 30% to 80%

Environmentally friendly disposal (Directive 2012/19/EU; ElektroG3) Sustainable reuse and professional recycling of electrical and electronic equipment is becoming increasingly important in the context of resource and environmental protection. Due to the legal framework of the extended Waste Electrical and Electronic Equipment Directive (ElektroG3), we as a manufacturer are responsible for informing you that we cover the entire product life cycle for all electrical and electronic equipment that we produce and place on the market. As a result, we undertake to take back equipment and systems that we have placed on the market free of charge if they are no longer required.

As a rule, a collection order is issued by your cost bearer (health, health insurance, substitute insurance, etc.) or directly by you as the user of the medical device when the necessity no longer applies. If your reading system has a memory function, we ask you to delete stored images, data, documents etc. before we collect them for data protection reasons.

In EU member states, the respective national implementation of Directive 2012/19/EU applies. In non-EU member states, the respective national implementation of the corresponding regulatory requirements applies.



MD

Power supply

Only original power supply units and power cables from Reinecker Vision GmbH may be used for the power supply.

Warning: Use of other accessories may result in increased emissions and/or reduced immunity, as well as damage to the product.

Safety instruction

Please respect the following safety instructions:

1. Do not plug the AC adapter into a faulty electrical outlet. Doing so may cause electrical shock or fire.
2. Do not touch the AC adapter with wet hands.
3. Only use the original power supply which is included in the delivery by Reinecker Vision GmbH. The use of any other equipment might lead to a product damage.
4. Do not expose the system to direct sunlight or to very hot or cold environment, as this would harm the picture quality.
5. Do not operate this device below +5°C or above +40°C.
6. No liquids must reach the interior of the system. Only operate the device in a dry environment.
7. The device may not be operated next to medical devices (patients environment).
8. Do not lean on the system and do not put heavy objects on it as the system could be damaged.
9. Do not try to repair or to dismantle the system by your own. This would automatically void the warranty. If you need any technical assistance please get in contact with the local distributor or with Reinecker Vision GmbH.
10. Always switch OFF the system and disconnect it from the power supply before cleaning it. Only use a soft and slightly damped cloth. Only use a mild household detergent. Do not use alcohol containing or strong detergents.

II. Instructions for the camera reading system

Scope of delivery

- Camera reading system topolino capo 2K
- Remote control
- Plug-in power supply 12V DC / 5.0 A incl. adapter cable (country-specific)
- USB 3.0 cable
- Instructions for use
- Service Information

Accessories (optional)

- HDMI cable
- Side cross table (available in different versions) for more comfort when reading
- Transport bag
- Battery or power bank
- HDMI-SWITCH (2 inputs/1 output) with foot switch

Setting up the camera reading system

Carefully remove the appliance from the packaging and place it on a stable surface with sufficient space.

The height-adjustable underframes from Reinecker Vision GmbH are suitable for this purpose.

Set up the camera reading system according to the steps shown:

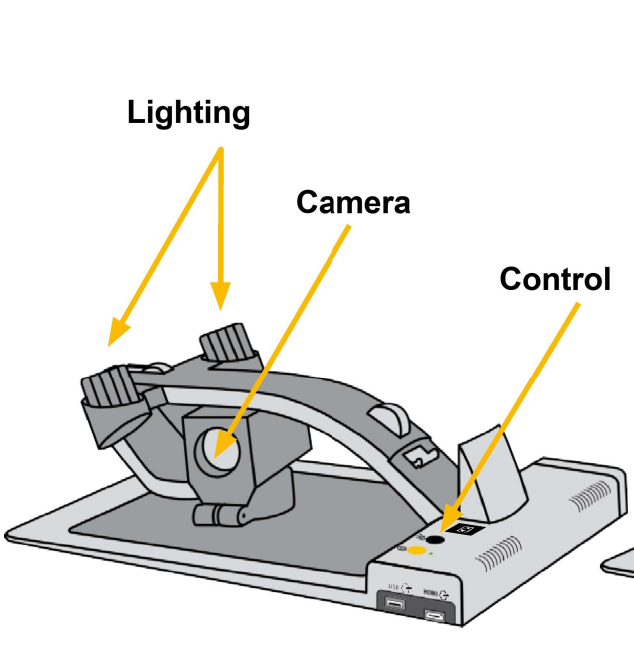

Camera reading system in folded transport position

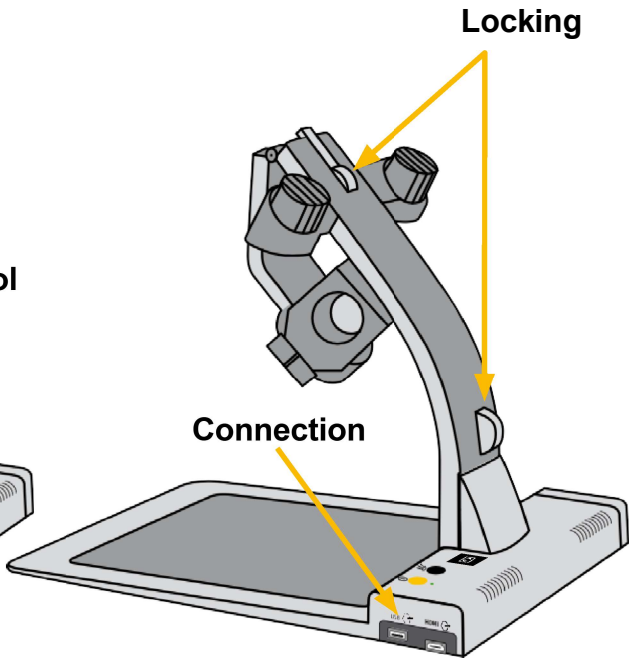

Raise the camera stand until the arm engages fully

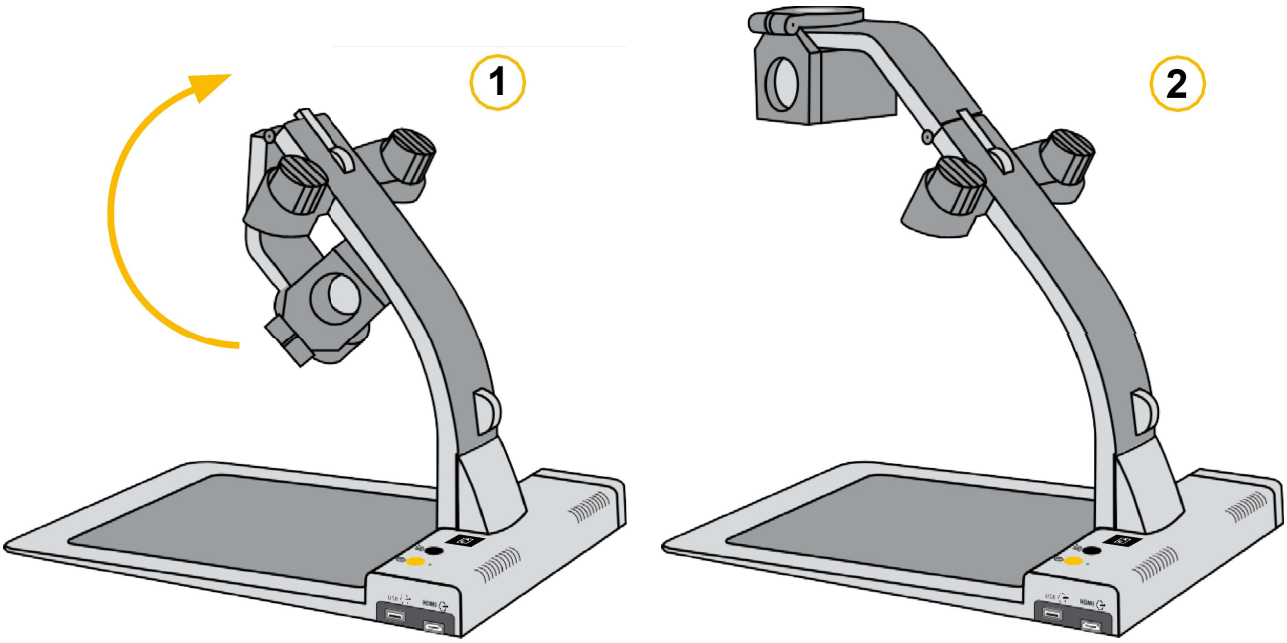

Swivel the camera head upwards,
until the lock engages on the arm **(see Fig. 1-2)**.

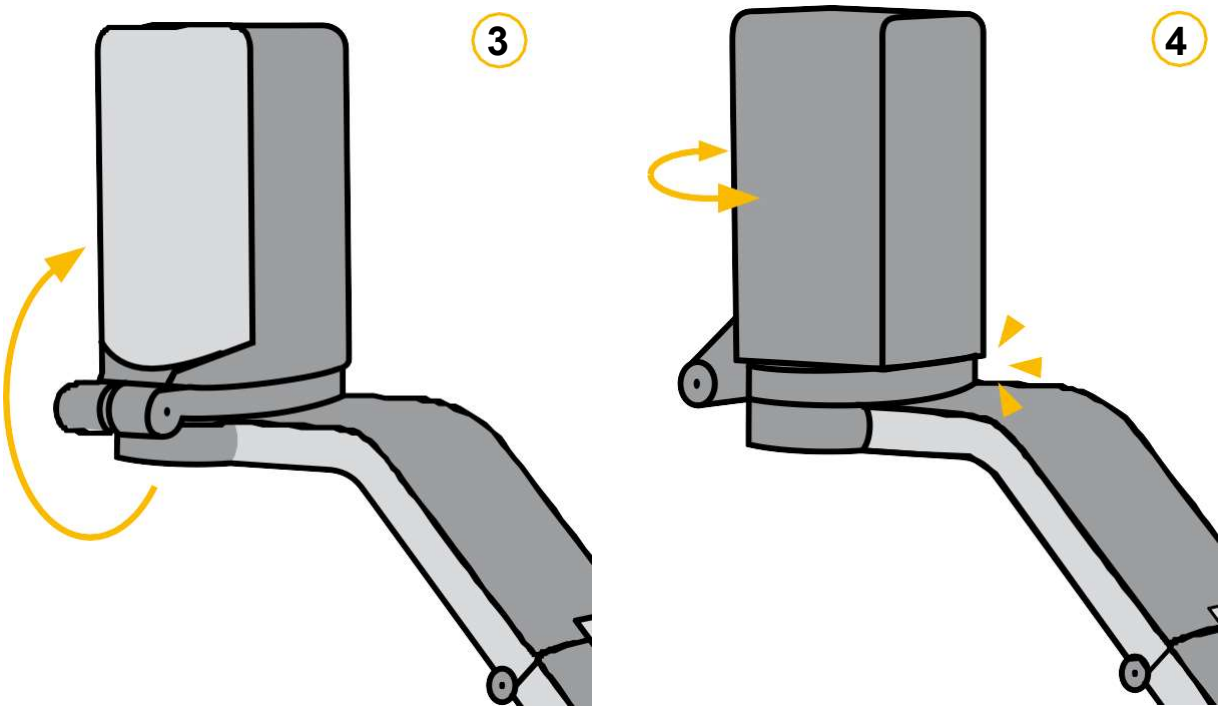

To bring the camera into the reading position (document mode), the camera must be swiveled so that the operating buttons are facing upwards **(see Fig. 3)**.

The camera can then be aligned in the corresponding reading position with a rotating movement. When you turn the camera, you will feel it click into place; the camera is now aligned horizontally **(see Fig. 4)**.

Connection to power supply

Connect the enclosed plug-in power supply unit to an external power supply and connect the DC plug to the 12V DC socket.

Attention: The power supply unit supplied is intended exclusively for operating the camera reading system. Do not use any other plug-in power supply unit or cable.

The device is now ready for operation.

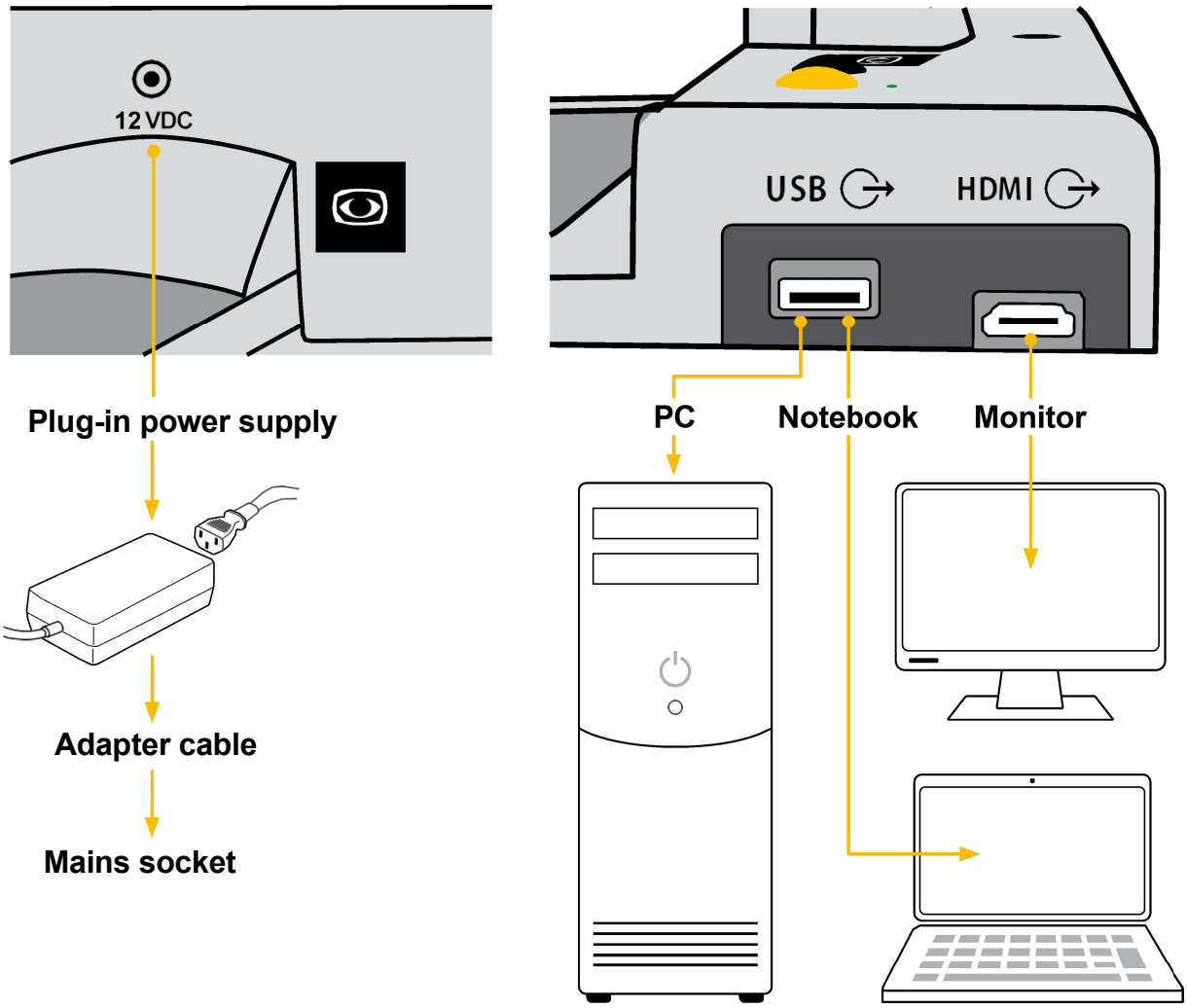

USB output (type A)

USB 3.0 connection for connecting a PC or notebook.

HDMI output (type A)

Connection for external monitor with HDMI technology.

Description of the operating elements on the device

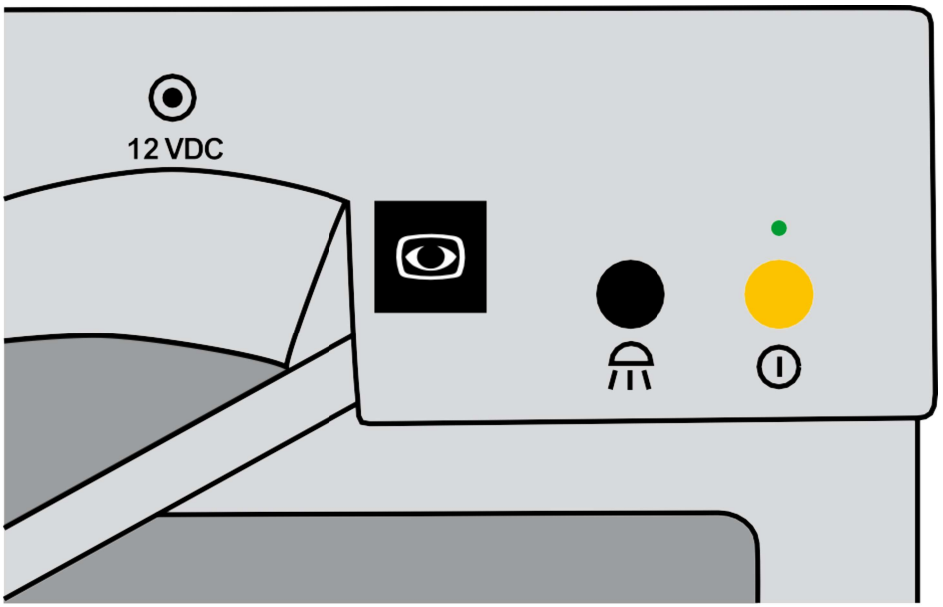

Power switch On/Off

Switches the system on or off. When the device is switched on, the green LED lights up.

The last settings used are automatically saved when the device is switched off.

When the camera reading system is switched back on, the last saved settings are reactivated.

Lighting on/off/dimming

The lighting can be switched on or off by briefly pressing the black operating button.

By pressing and holding the black operating button, the illuminance can be dimmed continuously brighter and darker. The selected light intensity is saved when the operating button is released.

Note:
The last light intensity is set when the light is switched on again.

Operating elements Infrared remote control

All camera functions are set using the remote control.

Note: The remote control works with infrared - when working with the remote control, always point it in the direction of the camera reading system.

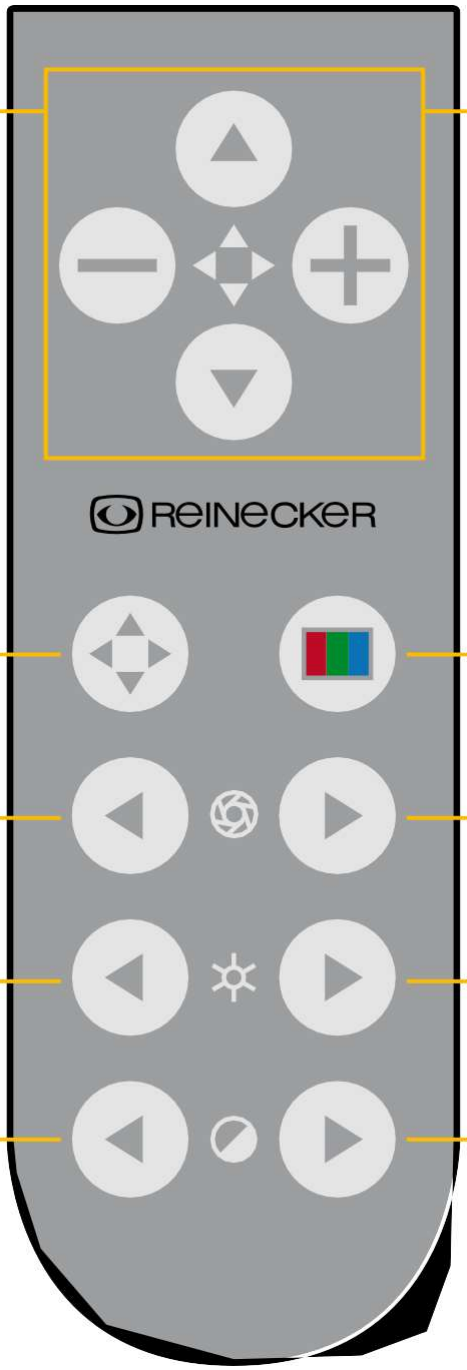

Function buttons (in document mode)

Minus button: Reduce magnification

Up arrow key: AF mode On/Off

Plus button: Increase magnification

Down arrow key: Ruler On/Off

Navigation in the menu

Menu button On/Off

Focus manual remote

Brightness minus

Contrast minus for False colors

Color saturation minus for true color display

Image limitation minus for mask function

Line ruler from

Function buttons (in room mode)

Minus button: Reduce magnification

Up arrow key: AF mode On/Off

Plus button: Increase magnification

Down arrow button: automatic aperture control (Auto-Exposure) On/Off

Switching from true colors to false colors

Reset function

Focus manual close

Brightness plus

Contrast plus for false colors

Color saturation plus for true color display

Image limitation plus with mask function

Line ruler on

Function keys/navigation keys in the menu



Function button
In the menu: Change settings



Function button
In the menu: Select top menu item



Function button
In the menu: Change or confirm settings



Function button
In the menu: select next menu item



Menu button

Press the button to switch the menu on/off.



Color mode

Switching the color displays (true colors and false colors pos./neg.)



Reset function

Press and hold the Color mode button for approx. 4 seconds until the reset function starts. The system is then reset to the factory settings.

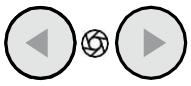

Manual focus

Press these buttons to adjust the focus (image sharpness).

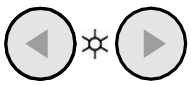

Brightness

Press these buttons to adjust the brightness (light intensity) of the image display.

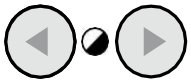

Saturation/contrast

Pressing these buttons changes the image contrast or color saturation.

In true color mode: control of color saturation

In false color mode: regulation of the image contrast

Note:
When the ruler function is switched on, these buttons are used to set the ruler position.

When the mask function is switched on, these buttons are used to set the mask window.

Tuning the remote control to defined devices

In order to operate several topolino systems in one room, it is possible to assign up to 12 different codes to the remote control.

To set a code, press one of the following combinations:

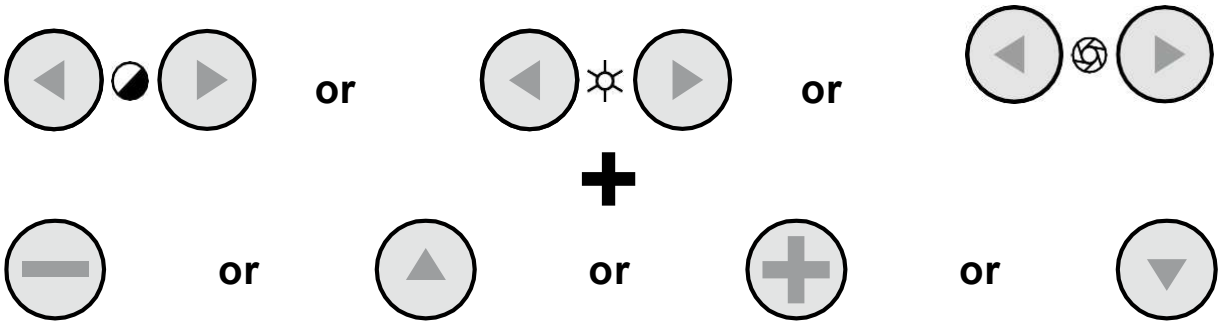

To confirm the respective code, press the Zoom +/- button on the camera head at the same time.

Controls on the back of the camera

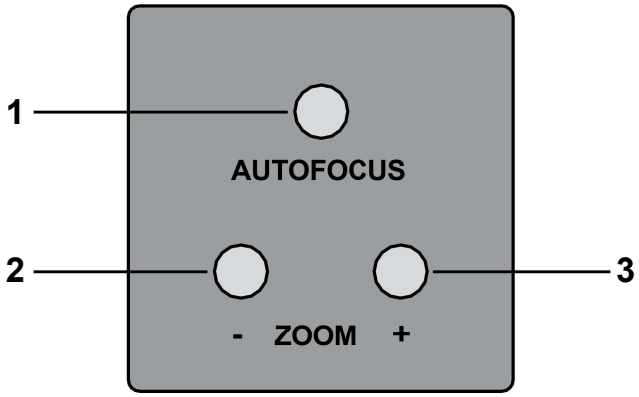

Autofocus

Press the AUTOFOCUS button **(1)** to switch the camera's autofocus on or off. The status of the autofocus function is displayed in the lower left area of the screen for approx. 4 seconds if the text overlay is switched on. When autofocus is switched on, the camera automatically adjusts the focus within its image scale.

Overview mode

If you are working with a large magnification and no longer know which area of the reading template or room you have magnified, this function gives you an overview of the magnified area.

At high magnification, press and hold the AUTOFOCUS button **(1)** until the "Overview mode" display appears in the lower left area of the monitor and the image on the monitor is reduced in size. The crosshairs in the middle of the image provide an overview of which area of the image is currently magnified.

If you release the AUTOFOCUS button **(1)**, the originally selected magnification is displayed again.

Zoom + / -

The magnification can be adjusted continuously using the **(3)** Zoom + / **(2)** Zoom - buttons.

Assign image mirroring with the zoom buttons

The image display on the monitor can be mirrored horizontally.

To do this, press and hold the **(3)** Zoom + and **(2)** Zoom - buttons until the "Mirror ON" display appears briefly and the image is mirrored.

If you want to return to normal mode, press and hold the two buttons again until the "Mirror OFF" display appears and the picture is displayed normally again.

Commissioning the camera reading system

Mains operation

For mains operation, ensure that the enclosed plug-in power supply unit is connected to the mains and to the power supply socket (12 VDC) of the camera reading system.

Switching on the camera reading system

Press the On/Off power switch to switch on the camera reading system. If the green LED lights up continuously, the system is ready for operation.

Exiting and switching off the camera reading system

Press the On/Off power switch to switch off the camera reading system.

Automatic saving of the device settings

All the last device settings used are active when the device is switched back on.

Replacing the lighting

The camera reading system is equipped with powerful LED lighting. If the lighting needs to be replaced, this must be carried out by an authorized specialist or by Reinecker Vision GmbH customer service.

Attention: Note on the plug-in power supply unit

Always use the plug-in power supply included in the scope of delivery to operate the camera reading system!

Switching from document to room mode

Document mode position

Position the camera head vertically and rotate it if necessary so that the camera is facing the reading plate in the correct position.

This camera position is suitable for reading and viewing originals, e.g. documents.

The camera lighting switches on depending on the presetting.

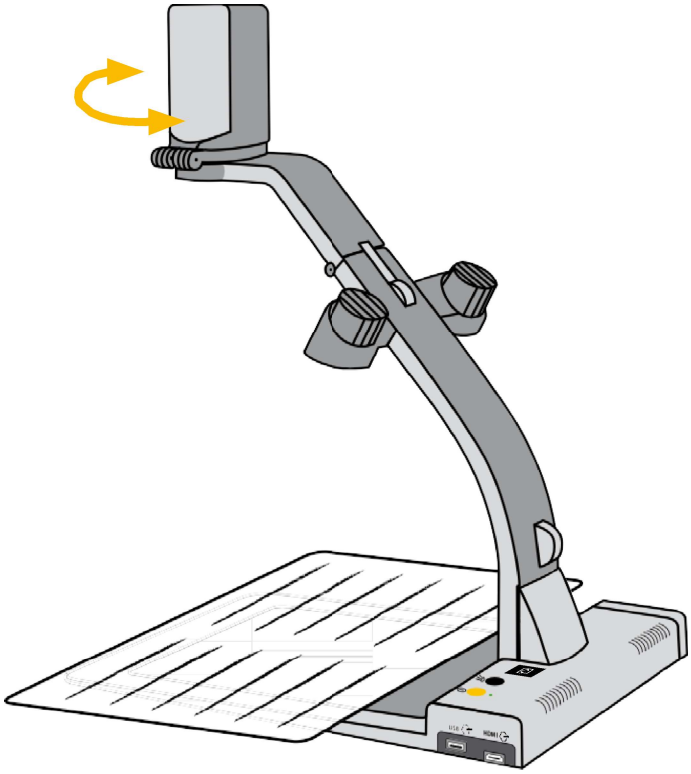

Room mode position

Tilt the camera head 90º horizontally.

The camera lighting switches off automatically.

.

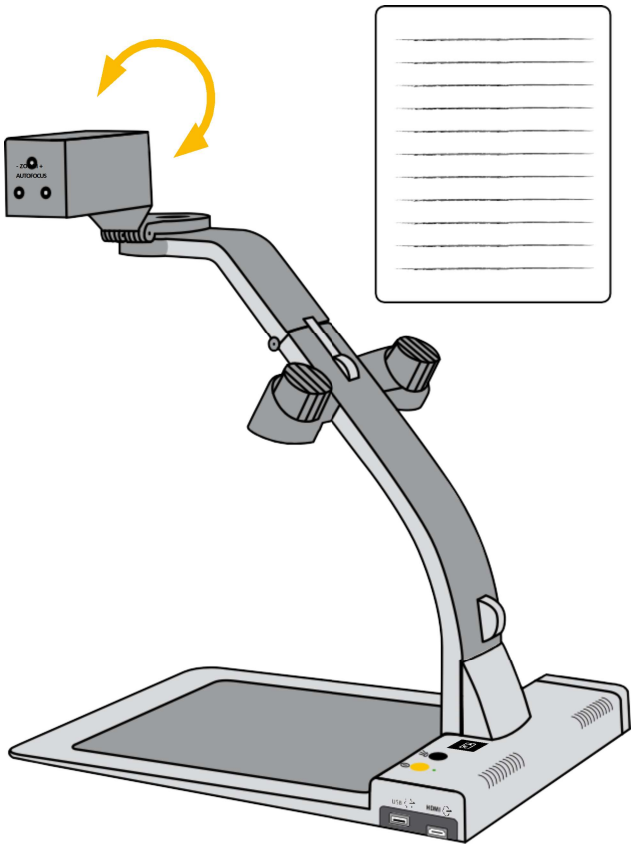

Note:
The swivel range of the camera is 270° in document and room mode.

Description of the menu functions

Call up menu selection

Press the menu button on the infrared remote control to open/close the menu.

Overview: Main menu

The menu with the various selection options is displayed on the screen.

Main menu	
Brightness	**+50**
Contrast	**+50**
Color saturation	**- 30**
Ruler / Mask	**From**
Ruler / Mask settings	
AF mode	**Continuous/zoom**
Reset to factory settings	
Restore user setting.	
Advanced settings	
Exit	

Note: If the screen remains black due to an incorrectly set resolution (TFT monitors must not be operated with a resolution higher than their native resolution), please reset the screen using the Color mode button (see page 14 -15).

Select menu item or change setting

Select the menu item using the or button and change or confirm the setting using the button.

Exit menu selection

Use the button  or to navigate to "Back" or "Exit" and exit the menu by pressing the button.  Alternatively, to switch off directly, press the menu button .

Explanation of the menu display

The illustration shows the structure of the menu display in detail.

Main menu	← Menu level 1
Advanced settings	← Menu level 2
Special settings	← Menu level 3
Key assignment	← Menu level 4
Function	**Setting range** | Explanation

Menu settings

Main menu	
Brightness	**Control range from -50 to +50**
Contrast	**Control range from -50 to +50**
Color saturation	**Control range from -50 to +50**
Ruler/Mask	**Off** | Hide ruler and mask **Ruler** | Show ruler **Mask** | Show mask

Main menu	
Ruler/mask setting	
Ruler/Mask	**Off** | Hide ruler and mask **Ruler** | Show ruler **Mask** | Show mask
Ruler position	**0 to 100** | Adjustable ruler position
Mask position	**0 to 100** | Image mask reducible
Ruler type	**Horizontal** | Align ruler horizontally **Vertical** | Align ruler vertically
Mask type	**Left/right** | image mask left/right; image mask closes up to max. 50%. **Top/bottom** | image mask top/bottom; image mask Closes up to max. 50%. **Left/Right FS** | Image mask left/right; Image mask closes up to max. 90% **Top/bottom FS** | image mask top/bottom; image mask closes up to max. 90% **Full screen** | Image mask covers entire monitor display
Mask transparency	**50%** | **25%** | **0%**

Main menu	
Ruler/mask setting	
Color ruler	
Red	**Control range from 0 to 31**
Green	**Control range from 0 to 31**
Blue	**Control range from 0 to 31**
Back	

Main menu	
AF mode	**Semi-automatic** | **Semi-automatic + zoom** | **Continuous/zoom**
Reset to factory settings	**Confirm** | Confirm selection to restore the factory settings
Restore user settings	**Confirm** | Confirm selection to restore the user setting
Advanced settings	*(see overview)*
Exit	

Overview:

Advanced settings	
Color combination. Setting...	
Image rotation	**0°**
Monitor brightness	**100**
language	**German**
Perform white balance	
White balance mode	**Auto.**
Sharpening...	
Text overlays	**On**
Special settings...	
Back	

Main menu
Advanced settings
Color combination. Settings...
Color combination 1-6

Mode	**Deactivate** | **True color** | **Grayscale** | **Miscolor**
Foreground	**Black** | **Red** | **Green** | **Blue** | **Yellow** | **Magenta** | **Turquoise** | **White** | **User 1** | **User 2**
Background	**Black** | **Red** | **Green** | **Blue** | **Yellow** | **Magenta** | **Turquoise** | **White** | **User 1** | **User 2**
Change front/rear gr.	Press operating buttons 1 or 3 to switch between the two views positive and negative
Back	

Main menu
Advanced settings

Color combination. Settings	
User colors	
User color 1 - Red	**Control range from 0 to 31**
User color 1 - Green	**Control range from 0 to 31**
User color 1 - Blue	**Control range from 0 to 31**
User color 2 - Red	**Control range from 0 to 31**
User color 2 - Green	**Control range from 0 to 31**
User color 2 - Blue	**Control range from 0 to 31**
Back	

Main menu	
Advanced settings	
Image rotation	**0° | +90° | 180° | -90°**
Monitor brightness	**Control range from 37 to 100**
Language	**English | German | French | Norwegian**
Perform white balance	Press control buttons 3 to carry out the white balance
White balance mode	**Automatic | By button** *(see Execute white balance)*

Main menu	
Advanced settings	
Sharpening...	
Read mode:	
Sharpness True colors	**Control range from 0 to 24**
Sharpness Off-color	**Control range from 0 to 24**
Room mode:	
Sharpness True colors	**Control range from 0 to 24**
Sharpness Off-color	**Control range from 0 to 24**
Back	

Main menu		
Advanced settings		
Text overlays	**On | Off**	
Special settings...	*(see overview)*	
Back		
Overview:	**Special settings...**	
	Zoom Extension	**On**
	Max. digital zoom	**3.5x**
	Resolution...	**1080p/60**
	Sensor Setup...	
	Save user settings	
	Expert settings	
	Monitor size	**19"**

	Back

Main menu	
Advanced settings	
Special settings	
Zoom Extension	**On** | **Off**
Max. Digital zoom	**Off** | Control range from 1.5x to 15.0x

Main menu	
Advanced settings	
Special settings	
Resolutions 1080p/60	
4 : 3:	**High resolutions**
UXGA60 (1600 x 1200)	Confirm resolution if necessary
16 : 9:	**High resolutions**
1080p60 (1920 x 1080)	Confirm resolution if necessary
2K60 16 : 9 (2048 x 1152)	Confirm resolution if necessary
16 : 10:	**High resolutions**
WUXGA/60Hz (1920 x 1200)	Confirm resolution if necessary
2K56 16 : 10 (2048 x 1280)	Confirm resolution if necessary
Low resolutions...	Press control buttons 3 to switch to the next selection
Back to	

4 : 3:	**Low resolutions**
XGA/60Hz (1024 x 768)	Confirm resolution if necessary
SXGA/60Hz (1280 x 1024)	Confirm resolution if necessary
16 : 9:	**Low resolutions**
WXGA2/60Hz (1366 x 768)	Confirm resolution if necessary
16 : 10:	**Low resolutions**
WXGA+/60Hz (1440 x 900)	Confirm resolution if necessary
WSXGA+/60Hz (1680 x 1050)	Confirm resolution if necessary
High resolutions...	Press control buttons 3 to switch to the next selection
Back	

Main menu	
Advanced settings	
Special settings	
Sensor Setup...	
Shutter False Col. read	**1/100** | **1/120** | **1/150** | **1/200** | **1/250**
Shutter Real Col. Read	**1/100** | **1/120** | **1/150** | **1/200** | **1/250**
Shutter False Col. room	**1/20** | **1/25** | **1/30** | **1/33** | **1/50** | **1/60** | **1/75**
Shutter Real Col. Room	**1/20** | **1/25** | **1/30** | **1/33** | **1/50** | **1/60** | **1/75**
Noise Red. F. Col. Read	**Off** | **Control range from 1 to 4**

Noise Red. R. Col. Read	**Off** | **Control range from 1 to 4**
Noise Red. F. Col. Room	**Off** | **Control range from 1 to 4**
Noise Red. R. Col. Room	**Off** | **Control range from 1 to 4**
Back	

Main menu	
Advanced settings	
Special settings	
Save user setting	Press control buttons 3 to save the user setting
Expert settings	Access - only by authorized service technicians
Monitor size	**Car** | **19"** | **22"** | **24"**
Back	

Fault diagnosis

Problem	Solution
No image reproduction	Check the mains connection, the cable connection to the monitor or PC and whether the relevant systems are switched on or active.
Picture dark	Check the brightness and contrast settings of the camera or monitor.
True color is not displayed correctly	Check the template, color mode setting, brightness, color saturation and camera lighting.

PC software installation

To display the topolino camera image on your PC or notebook, you need magnification software such as Supernova (from version 16) or Zoomtext (from version 10).

If no magnification software is installed on your PC or notebook, install the free PC software "SuperNova Magnifier & Speech" from the Internet. (demo version)

https://www.reineckervision.de/medien/software-testversionen/

Once the software has been installed, Supernova is available to you with all camera functions and their views (e.g. image splitting) and PC image magnification functions. The camera functions can be used permanently with Supernova from version 16.05 onwards. You can also use all Supernova functions for the first 30 days. After the 30 days have expired, only the camera functions can be used.

If a full version of Zoomtext or "Dolphin Supernova" has been purchased, it must be activated via the Internet using the corresponding activation code.

Note:

- You may require administrator rights from your IT department for the duration of the software installation.
- Your computer should meet the following system requirements.
- Before installing the software, we recommend a Windows update to ensure that your operating system is up to date.

System requirements

Operating systems

- Windows 7 (all versions) 32 and 64 bit
- Windows 8.1 (all versions) 32 and 64 bit
- Windows 10 (all versions) 32 and 64 bit

Recommended PC hardware

- **Processor:** 1.5 GHz or higher, compatible with SSE2 instruction set support
- **RAM:** 4GB or higher
- **Hard disk:** 5GB free hard disk storage e.g. for "Dolphin Supernova" magnification (Magnifier)
- **Graphics card:** 512MB RAM graphics card memory recommended or higher, with DirectX 9.1 support
- **Sound card:** If required, Windows compatible sound card e.g. for "Dolphin Supernova" magnification with voice output
- **USB ports:** 1 x USB 3.0 for the topolino camera system

Installing the Supernova software

Start your "Dolphin installation program" software with a double-click and carry out the following steps:

1. Click on "Yes" to start the installation process.
2. After a few minutes, the symbol appears at the bottom right of the screen
   
   " file successfully extracted".
3. Select the product language in the following window and confirm the language selection with "Next".
4. First read through the "SuperNova Screen Enlargement" license agreement. Then click on "Accept" to start the installation.
5. Click on 'Restart' before you run SuperNova. Once the computer has restarted, SuperNova will run automatically.

Connecting the camera system to the PC or notebook

1. After restarting the PC or notebook, connect the camera system to an active USB 3.0 interface using the USB 3.0 cable supplied.
2. Switch on the camera reading system so that the driver installation can take place, whereby an Internet connection may be required.

Select camera system in Supernova or Zoomtext

1. After successful installation, start the Supernova or Zoomtext software.
2. Under the Supernova or Zoomtext software, select the **"USB Capture HDMI"** camera system or device.
3. The camera system can now be used with the corresponding functions under the Supernova or Zoomtext software. Please refer to the Supernova or Zoomtext documentation for further information.

Technical details

● **Camera:**	2K read/space camera with maximum image resolution, up to 2048 x 1152 in 16 : 9 format 2048 x 1280 in 16 : 10 format (only via HDMI connection) approx. 22x lossless magnification Magnification in document mode from approx. 0.9 - 100x (depending on the monitor size)
● **Autofocus:**	Comfort autofocus, can be switched off
● **Color mode:**	True color, high-contrast false color and others User-definable color representations
● **Product weight:**	approx. 3.9 kg
● **Dimensions (WxHxD):**	assembled: approx. 31 x 58.5 x 46 cm Folded: approx. 31 x 15.5 x 46 cm
● **Power supply:**	external plug-in power supply Input: 100-240 VAC 50/60 Hz / 1.5 A Output: 12V DC 5.0 A
● **Power consumption:**	approx. 25 watts

Warranty information

1. Reinecker Vision GmbH grants a warranty of 24 months (warranty period only valid within the European Union) against defects in manufacture counted from date of invoice ex Reinecker Vision GmbH.
2. All parts that have been replaced when repairing the unit will automatically become property of Reinecker Vision GmbH.
3. Damage caused by improper use or by non-compliance with the operating instructions will result in the invalidation of the warranty.
4. Interventions from persons other than Reinecker Vision GmbH authorised specialists may lead to invalidity of warranty.
5. The liability for defects in material does not include illuminants that serve to illuminate the reading material and other parts subject to wear and tear, such as rechargeable batteries, etc.
6. If a warranty claim is necessary, the system has to be returned to the manufacturer in Alsbach-Hähnlein or to your authorized dealer in the original packaging including all components. The manufacturer does not carry the cost for transport, packaging and insurance. Prior to returning the system, a RMA number issued by Reinecker Vision is required. Please have the exact serial number of your system before hand.

Phone number: +49 6257 9311- 0

View our General Terms and Conditions
.

Your authorized distributor
:

Type:	topolino capo 2 K **(TOCA2K01)**
Serial no:	
Manufacturer:	Reinecker Vision GmbH
Final inspection:	
Power connection:	100 VAC - 240 VAC 50-60 Hz
Via plug-in power supply unit:	12V DC / 5000mA
Power consumption:	max. 25 watts

Reinecker Vision GmbH Head Office

Sales, customer service:
Sandwiesenstrasse 19
64665 Alsbach-Hähnlein

Customer service:
Erlenweg 3
64665 Alsbach-Hähnlein

Phone: 06257 93 11- 0
Fax: 06257 93 11- 8008

Email: info@reineckervision.de
www.reineckervision.de

SRN: DE-MF-000025998

If you have any questions or need service, please contact our main plant in Alsbach-Hähnlein directly.

For products purchased abroad, please contact your local dealer if you require service.

Reinecker Vision GmbH International Contact

sales department, customer relations:
Sandwiesenstrasse 19
DE-64665 Alsbach-Hähnlein

customer service:
Erlenweg 3
DE-64665 Alsbach-Hähnlein

Phone: + 49 6257 9311- 0
Fax: + 49 6257 9311- 8230

Email: international@reineckervision.de
www.reineckervision.com

SRN: DE-MF-000025998

In case service is necessary, please contact your authorized distributor.

Version 2.1, status 11/23, art. no. 000 206 10
Subject to changes and printing errors.

REINECKER