User manual

VERDE mezzo lite

EN



Lesen Sie unbedingt die Gebrauchsanweisung vor Inbetriebnahme – Benutzung – Wartung. Dadurch schützen Sie sich und vermeiden Schäden an Ihrem Gerät.

REINECKER

VERDE – The environmentally friendly screen reading system

During the development of the VERDE series screen reading systems, a strong emphasis was placed on the responsible use of resources and materials.
In **collaboration with TÜV Hessen** and other partner companies, development, production, and recycling processes were specifically optimized. The result is **VERDE – a high-quality and particularly eco-friendly screen reading system**.

The VERDE series guarantees the use of at least **66% recycled materials**. Thanks to state-of-the-art LED technology in both lighting and display, the system also features very low energy consumption. Naturally, the VERDE series meets the highest standards of quality and functionality.

The screen reading systems of the VERDE series offer three key advantages: they provide optimal support for all reading and writing tasks, help protect the environment, and at the same time reduce costs.

The VERDE Series – Good for the Environment

VERDE mezzo is an opto-electronic screen reading system designed to magnify text and images for both professional and long-term personal use. Documents and images are captured the integrated camera and displayed clearly on the monitor.

In line with the VERDE philosophy, sustainability plays a central role:

- At least 66% recycled materials and components are used.
- Development and production processes are optimized with a strong focus on environmental responsibility.
- Economy materials are utilized – these are materials of full quality with minor visual imperfections. They are not used in our premium series and would other wise be discarded.
- Advanced LED technology in both lighting and display ensures particularly low energy consumption.
- The product is delivered in previously used but fully functional packaging.

Content

VERDE – The environmentally friendly screen reading system 3
I. General information 5
I.I Safety advice 7
II. Safety instructions to avoid damage 9
III. Instructions for the reading system VERDE mezzo lite 10
Delivery content 10
Product overview 10
Camera 10
Installation of the system 11
Connection of the unit 12
Alignment of monitor 13
Alignment of the XY-table VERDE mezzo lite 14
Description of the control elements 15
Control panel on base plate 15
Power switch ON / OFF 15
Lighting: On/Dimming/Off 15
Monitor control panel 16
Colour mode selection 16
Central button: 17
Zoom +/- 17
Autofocus (AF) 17
Overview mode 17
Right button: 17
Automatic colour saturation 17
Brightness/Contrast 17
Line marker and shadowing 18
Power ON / OFF VERDE mezzo lite 18
Operation with power supply and cables 18
Power OFF 18
Power OFF 18
Automatic saving of device settings 18
Replacement of lighting 18
Important note to the use of power supply 18
IV. Troubleshooting 19
V. Technical details 19
VI. Warranty Information 20

I. General information

Important notes on the operation of the reading system VERDE mezzo lite!
Please read them carefully prior to the operation of the reading system!

Notes on the electromagnetic compatibility (EMC)

This reading system is suited for use in all set-ups including the domicile that are connected directly to a public power supply for buildings with residential purposes.

This reading system is designed for the use in the indicated electromagnetic environment. The user should ensure the use in the indicated environment.

This reading system operates on HF-Energy exclusively for its own function. Therefore the emitted interference of high frequency disturbances is very low and the interference with other appliances operated close-by is improbable. When operating the reading system simultaneously with other systems, however, the possibility of disturbances of the system or other systems should not be neglected.

For this reason it should be ensured that the system is not placed directly beside or on top of another system. If the set-up of this system in the proximity of medical, measuring devices cannot be avoided, the operator of these devices has to be informed that it is necessary to observe the performance of the system to control the conventional use of the system in the chosen set-up.

Electronic devices are sensitive towards electric discharge and towards high frequency electromagnetic fields

Attention: In order to avoid high frequency disturbances the operator should respect a minimum distance of one meter to portable and mobile HF-telecommunication devices. Please also see chapter: „Safety advice“ on page 7.

Storage of the user manual

The user manual is an essential part of your reading system. Please keep the booklet in a safe place for future reference.

Product description

The VERDE mezzo lite is an opto-electronic video magnification system designed to enlarge text and image materials for professional and long-term private use.

Documents and images are captured using the integrated camera and displayed on the monitor.

- The VERDE mezzo lite video magnification system impresses with razor-sharp, high-resolution images and excellent ease of use.
- The HD camera enlarges printed and handwritten material with outstanding image quality, minimal image noise, and reduced reflections from glossy surfaces.
- The high-resolution LED flat-screen monitor can be adjusted continuously and positioned easily.
- Its compact design and folding mechanism allow the VERDE mezzo lite to be transported effortlessly and set up or folded away quickly whenever needed.
- In combination with one of the optionally available XY tables, user comfort can be enhanced even further.

Cleaning of the system

- Before cleaning, disconnect the unit from the power supply.
- Clean the device with a mild household cleaner and a microfiber cloth.
- Do not allow any liquids to enter the device.

Special advice for transport and storage

For safety reasons, the unit must only be shipped in the original packing. The unit must be stored in dry and closed rooms in the original packing.

The following conditions for transport and storage have to be respected:

- Air pressure 700 to 1000 hPa
- Temperature range +5°C to + 50°C
- Relative air humidity 30% to 80%

Important note on reading, capturing and playback of medication leaflets

Dosage and quantity information from medication leaflets, read from the screen or, if a read-aloud function in your system is available, played back, must always be checked and re-confirmed independently! Always ask your doctor, pharmacist or a person you trust about dosing of medications!

Power supply

Only use the original power supply which is included in the delivery by Reinecker Vision GmbH.

Caution: The use of any other power supply besides the original, might lead to an increased electro-magnetic emission and to product damage.

Purpose

This opto-electronic reading system is a medical device to assist with the reading and magnifying of printed text and pictures. Visually impaired people can compensate for their loss of visual acuity by using this device.

Medical device

This reading system is classified as a medical device, class I according to (EU) 2017/745, Annexe VIII, standard 13. For the distribution to countries outside the EU the respective country-specific guidelines have to be regarded.

Declaration of conformity, CE mark

CE

You can request a copy of the declaration of conformity in written form from Reinecker Vision GmbH, Sandwiesenstr. 19, 64665 Alsbach-Hähnlein or view it at www.reineckervision.de/eu-doc

Evolution and lifetime of products

The Medical Device Directive regulates by law that manufacturers of medical devices shall determine a period of safety operation of a product. We fulfill hereby legal requirements and determine - for formal reasons - a period of three years after date of first purchase.

Note:
The mentioned life span does not reflect the complete life span of the system. It is rather an indication on when the product might be obsolete and substitution might be recommended due to new product developments.

Combination with other medical products

If the operator/user wants to operate this device in conjunction with other life sustaining medical devices, please get in touch with Reinecker Vision GmbH or with your local dealer, prior to operation.

I.I Safety advice

The device has to be set up and operated in closed and dry rooms only. Do not plug the device into an electrical circuit that is also being used for any life sustaining or support systems. The device may not be used in the patients environment.

This device should not be operated in explosion-endangered environments.
This device should only be installed in conjunction with a state-of-the-art electrical circuit.

Precautions by alteration of the performance of the system

Should any of the technical features or performances change (failure, malfunction etc.), the device must be turned OFF and the battery must be taken out.
Please do not switch ON the device again. Refer directly to your authorized dealer or to Reinecker Vision GmbH Service Center.

Reinstatement / installation and maintenance

This device may be technically maintained and reconditioned by Reinecker Vision GmbH only or by an authorized technician. Reinstatement may only take place after the system has been cleaned and safety checked.

Environmentally friendly disposal (Directive 2012/19/EU)



MD

Within the EU the respective national implementations of the Directive 2012/19/EU for the sustainable re-use and proper recycling of electrical and electronic equipment applies.
For countries outside the EU (e.g. Switzerland), the respective national implementations for the regulatory requirements for environmentally friendly disposal and recycling applies.

List of symbols used

	Manufacturer	REF	Catalogue Number
#	Model number		Caution
SN	Serial number	UDI	Unique Device Identifier
MD	Medical device		Temperature limit
	Consult instructions for use		

II. Safety instructions to avoid damage

Please respect the following instructions for your own safety:

1. Do not plug the AC adapter into a faulty electrical outlet. Doing so may cause electrical shock or fire.
2. Do not touch the AC adapter with wet hands.
3. Only use the original power supply and cables which are included in the delivery by Reinecker Vision GmbH. The use of any other equipment might lead to a product damage.
4. Do not expose the system to direct sunlight or to very hot or cold environment, as this would harm the picture quality.
5. Do not operate this device below +5°C or above +40°C.
6. No liquids must reach the interior of the system. Only operate the device in a dry environment.
7. The device may not be operated next to medical devices (patients environment).
8. Do not lean on the screen, touch the screen with any object or lay heavy objects on the device. This may cause damage to the device.
9. Do not try to repair or to dismantle the system by your own. This would automatically void the warranty. If you need any technical assistance please get in contact with the local distributor or with Reinecker Vision GmbH.
10. Always switch OFF the system and disconnect it from the power supply before cleaning it. Only use a soft and slightly damped cloth. Only use a mild household detergent. Do not use alcohol containing or strong detergents.

III. Instructions for the reading system VERDE mezzo lite

Delivery content

- Reading system VERDE mezzo lite
- Power adapter 12V DC / 5000mA
- Adapter cable (country-specific)
- User manual / Service information

Product overview

VERDE mezzo lite 22" **VERME22L**

Camera

HD camera with digital zoom and convenient autofocus

- Magnification:
  VERDE mezzo lite 22" model with XY table: approx. 3.5x to 120x magnification

Installation of the system

Unpack your VERDE mezzo lite carefully and place it on a solid horizontal surface. If you have not purchased an optionally available stand that fits to the product you must provide a solid surface for the system with sufficient surface area.

Set up your VERDE mezzo lite as described below:

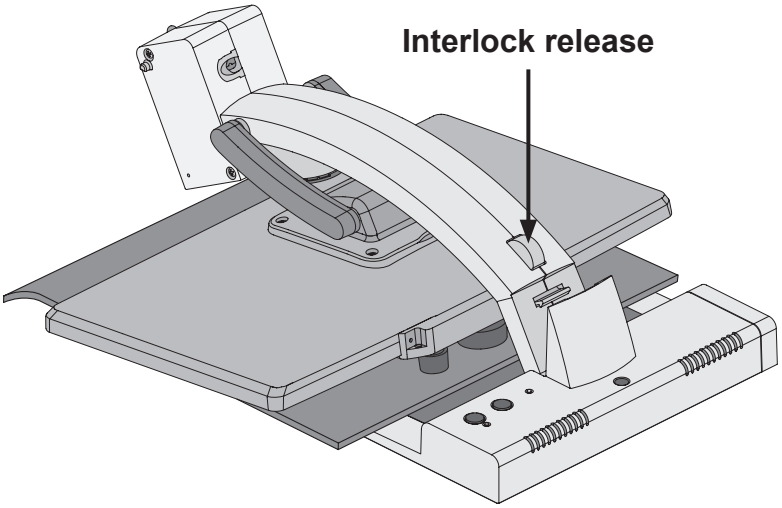

- Folded mezzo for transport.

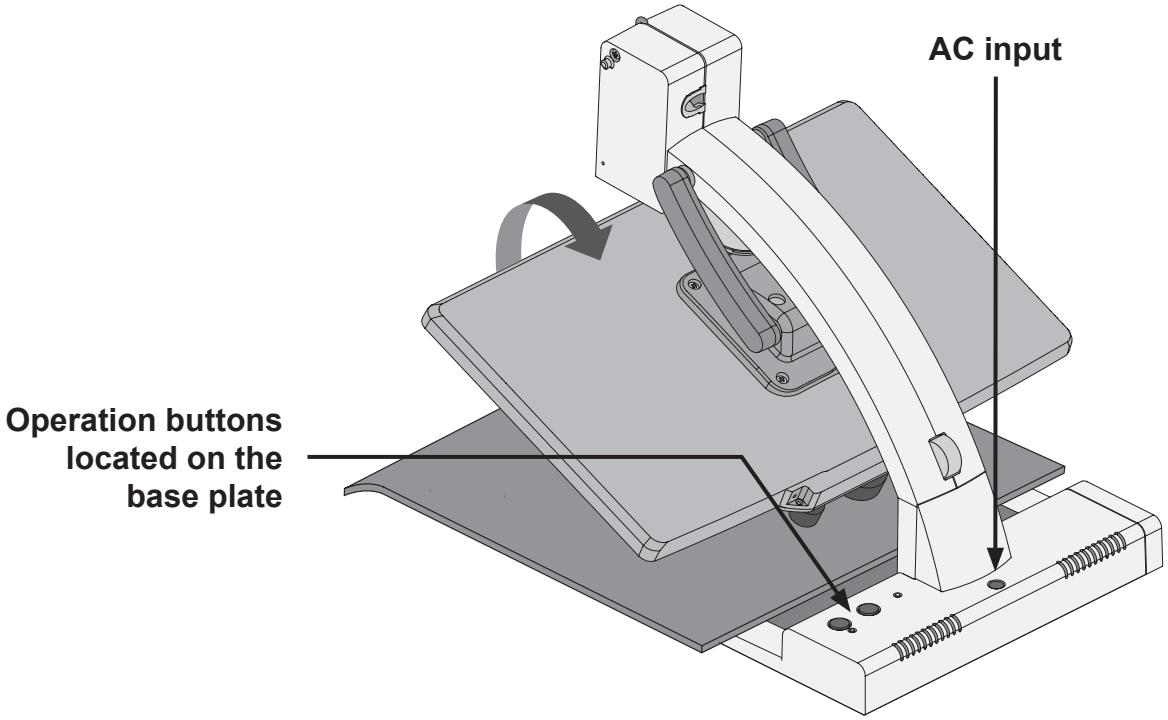

- Bring the monitors arm in the upright position until the interlock release snaps in.

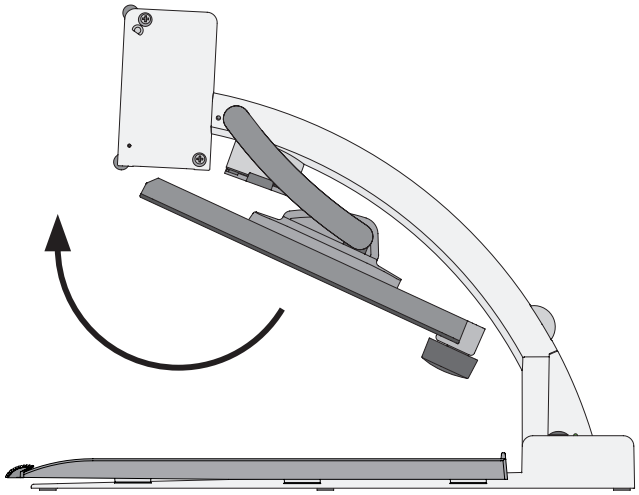

- Move the monitor upwards.

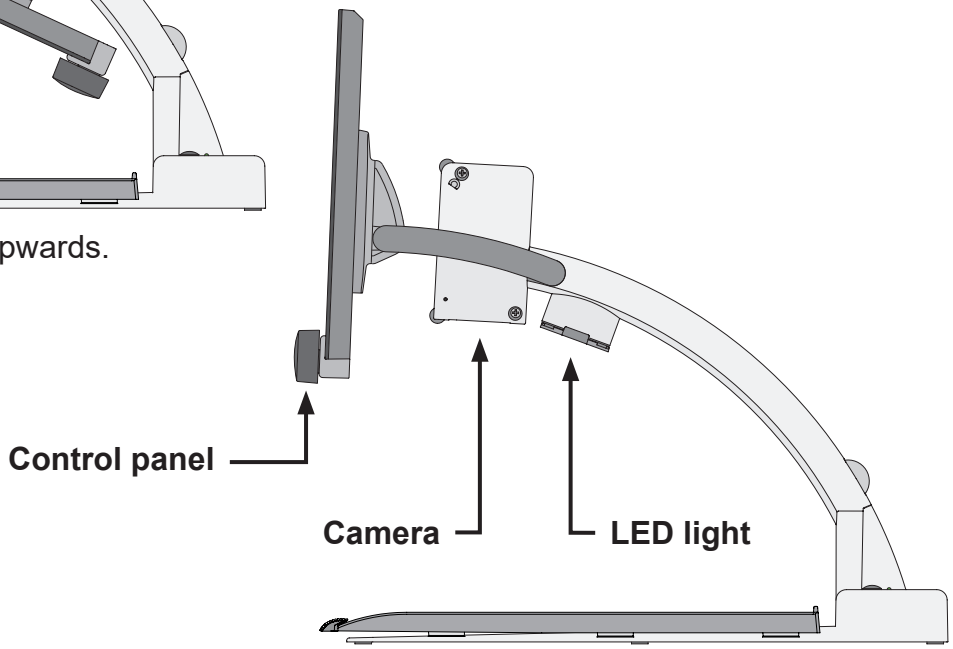

Connection of the unit

Connect the power supply to a mains wall socket and plug the adapter end of the cable into the AC input socket (12V DC) located on the base plate of the VERDE mezzo lite.

Note:

The supplied plug-in power supply is exclusively for the operation of this device. Please do not use any other power adaptor or cable. Once the device is plugged in, it is ready to use.

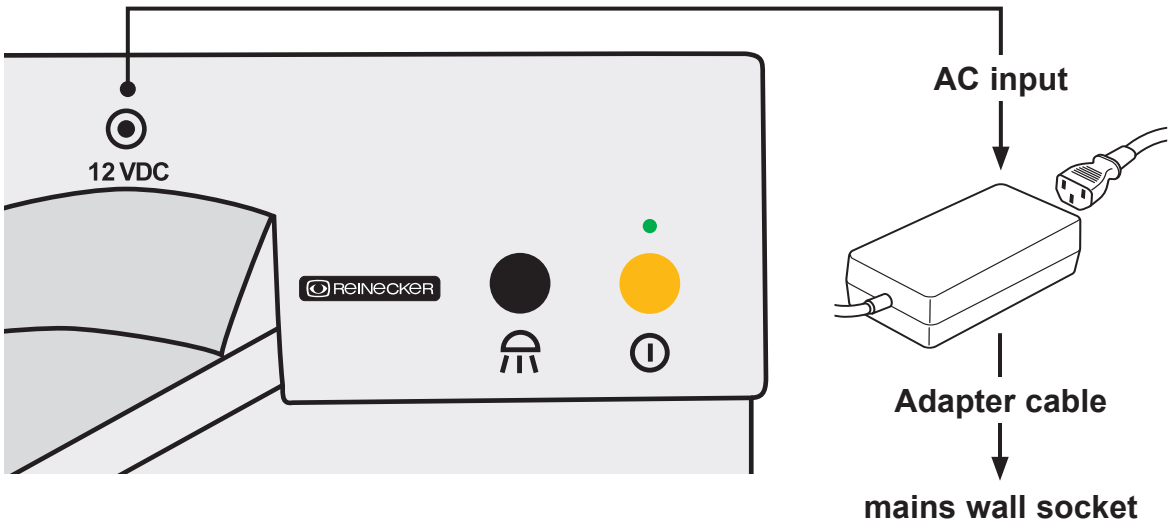

Alignment of monitor

Due to the screen technology, contrast and brightness change depending on the viewing angle.

The highly flexible monitor arm allows the user to adjust the monitor according to their seating position.

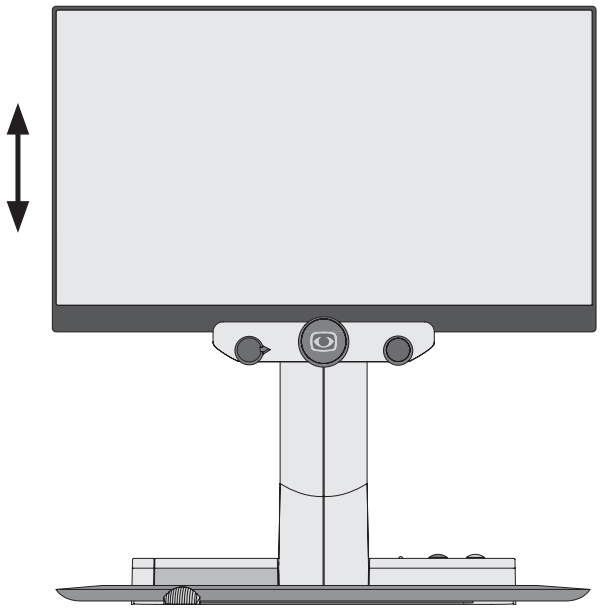

- The monitor can be moved vertically up and down.

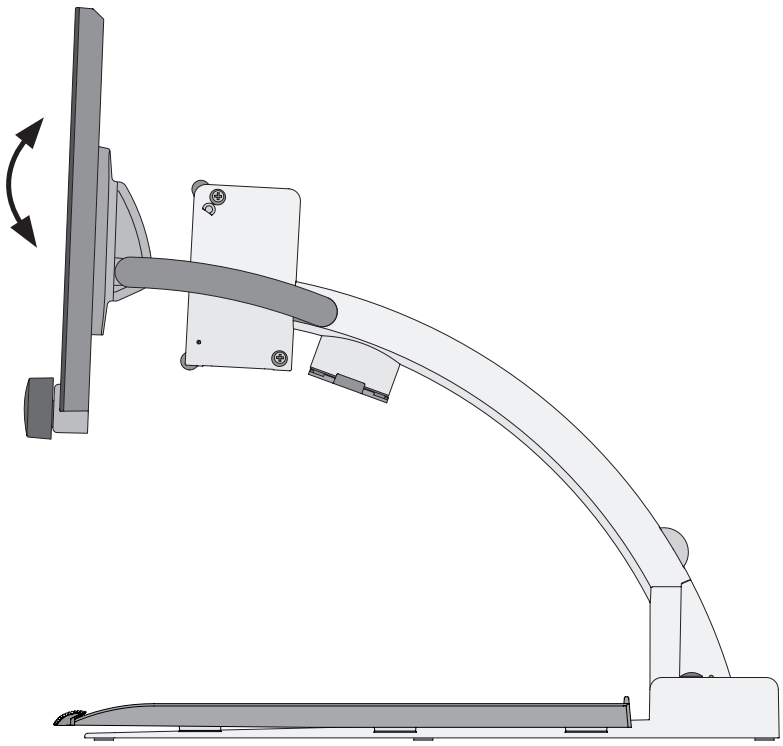

- The monitor can be tilted vertically.

Alignment of the XY-table VERDE mezzo lite

If your VERDE mezzo lite has a XY-table (ZBXTFIX0) with friction brakes, the friction can be continuously adjusted with the lever located in front of the table by pushing the lever slowly from the left to the right.

By pushing the lever from the very left side (no friction at all) to the center, you will fix the y-axis. By pushing the lever to the very right side, you will also fix the x-axis (lock).

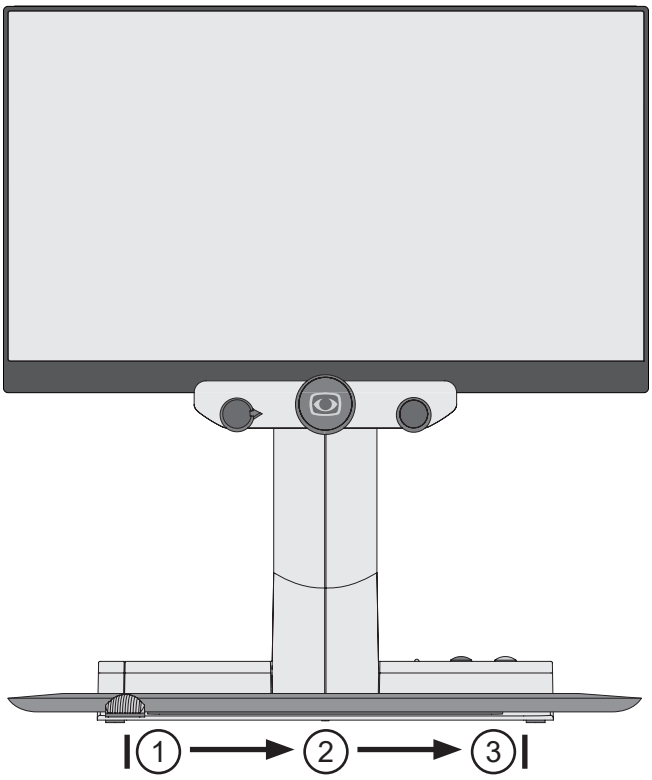

1. Left: no friction at all

2. Left to center: fixing the y-axis

3. Center to right: fixing the x- and y-axis (lock)

Description of the control elements

Control panel on base plate

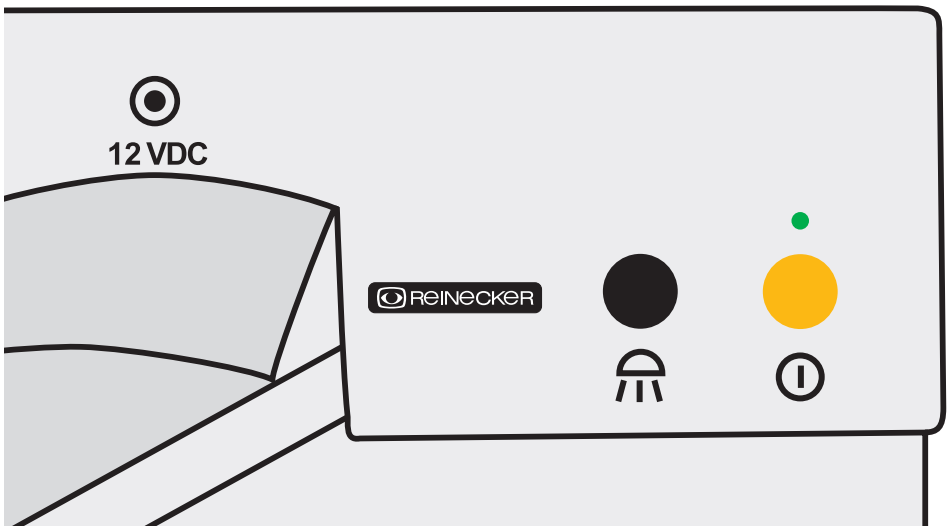

Power switch ON/OFF

The reading system can only be switched on using the yellow power switch once it has been properly connected to the power supply.

The reading system can be turned on or off by pressing the power switch. After switching on, the green power LED lights up.

Attention: If the reading table is not illuminated after switching on the device, check whether the lighting has been activated (see also “Lighting On/Off/Dimming”).

Lighting: On/Dimming/Off

By pressing the “Lighting On/Off” control button on the control panel, the lighting can be:

- switched on
- dimmed
- switched off

Monitor control panel

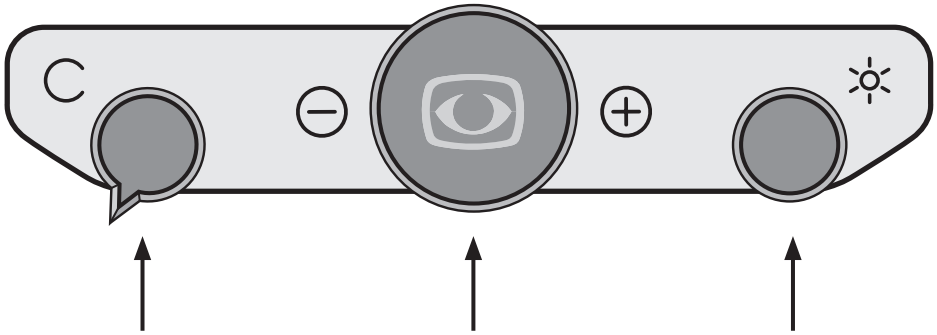

Colour mode selection

Zoom +/-
Auto-focus ON/OFF
Overview Mode

Brightness/Contrast
Line marker/Shadowing

Left button:

Colour mode selection

This button can be turned endlessly to the right or to the left and will always change the positions of the color mode (1-6):



Position 1: full colour display
Position 2: black font, white background
Position 3: white font, black background
Position 4: green font, black background
Position 5: yellow font, black background
Position 6: yellow font, blue background

Central button:

Zoom +/-

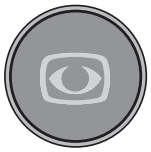

The magnification can be adjusted continuously from minimum to maximum using the central control button (turn clockwise from left to right).

The last magnification set will be memorized and displayed when turning the VERDE mezzo lite ON again.

Autofocus (AF)

Briefly pressing the zoom control toggles the automatic focus adjustment on or off.

Overview mode

When you are reading at a higher magnification level and want to find out which part of the page you have reached, this function helps you to get the overview.

Press the central (“zoom”) button at a higher magnification level for approximately 2 seconds until the overview mode is activated. The image on the screen will minimise and you will see an overview of the whole document/image/printed text. A faded cross will appear and indicate the area that is currently being magnified. Once the central button is released it will return back to the reading mode and selected magnification level.

Right button:

Automatic colour saturation

Brightness and colour saturation are automatically adjusted, colours are displayed true to original. The colour saturation range can also be adjusted in the menu.

Brightness/Contrast

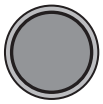

Turning the right control button adjusts brightness and contrast. That means that both, bright and dark image zones, change equally. (to be turned endlessly either to the left or to the right).

turn to the left: lowest contrast, lowest brightness

turn to the right: maximum contrast, maximum brightness

Line marker and shadowing



By pressing the right control button the horizontal function of line marker/shadowing will be activated.

By pressing the operating key again, the vertical function of the line marker/shadowing will be activated.

The operating key can be rotated endlessly from left to right and switches seamlessly between line marker/shadowing.

Pressing the operating key again will deactivate the line marker/ shadowing function.

Power ON/OFF VERDE mezzo lite

Operation with power supply and cables

Make sure that the delivered power adapter and cable are connected properly with a wall socket and VERDE mezzo lite AC input 12V DC.

Power OFF

Press the ON/OFF button to switch ON the device. When the VERDE mezzo lite and the base plate is illuminated, you can put a page or an object onto the table.

All the possible settings – for example zoom, colour or brightness- can be adjusted individually.

Power OFF

Switch OFF the device by pressing the ON/OFF button.

Automatic saving of device settings

All latest used settings of the device will be active, when switching ON the device again.

Replacement of lighting

The electronic magnifier is equipped with a high power LED Illumination.
If replacement of the lamp is required it should only be done by a specialist or by Reinecker Vision GmbH.

Important note to the use of power supply

Please only use the power supply included in the delivery. Use of any other power supply will void the warranty!

IV. Troubleshooting

Problems	Solution
No image is shown	Check the mains connection, the cable connection to the monitor and that all relevant systems are switched ON or activated.
Screen is dark	Check the brightness and contrast settings of the camera/monitor.
True colour is not displayed correctly	Check your reading material, colour mode setting, brightness, colour saturation and camera lighting.

V. Technical details

VERDE mezzo lite **22" class monitor**	LED flat screen monitor 22" class | approx. 56 cm (1360 × 768 pixels) height-adjustable, vertically tiltable	Weight: approx. 10,0 kg incl. XY-table Dimensions (W×H×D) assembled: approx. 49.5×55×54 cm Dimensions (W×H×D) folded: approx. 49.5×31×54 cm
Colour modes	True colours, preset and individually adjustable artificial colour modes	
Auto-focus	Can be switched OFF	

VI. Warranty Information

1. Reinecker Vision GmbH grants a warranty of 24 months (warranty period only valid within the European Union) against defects in manufacture counted from date of invoice ex Reinecker Vision GmbH.
2. All parts that have been replaced when repairing the unit will automatically become property of Reinecker Vision GmbH.
3. Damage caused by improper use or by non-compliance with the operating instructions will result in the invalidation of the warranty.
4. Interventions from persons other than Reinecker Vision GmbH authorised specialists may lead to invalidity of warranty.
5. The liability for defects in material does not include illuminants that serve to illuminate the reading material and other parts subject to wear and tear, such as rechargeable batteries, etc.
6. If a warranty claim is necessary, the system has to be returned to the manufacturer in Alsbach-Hähnlein or to your authorized dealer in the original packaging including all components. The manufacturer does not carry the cost for transport, packaging and insurance. Prior to returning the system, a RMA number issued by Reinecker Vision is required. Please have the exact serial number of your system before hand.

Phone number: +49 6257 93110

View our General Terms and Conditions.

Your authorized distributor:

Type:	**VERME22L**
Serial number:	
Manufacturer:	Reinecker Vision GmbH
Final examination:	
Power supply:	100 VAC – 240 VAC 50-60 Hz
With plug-in power supply:	12V DC/5000mA
Power consumption:	max. 80 watt

Manufacture

Reinecker Vision GmbH
International Contact

sales department, customer relations:
Sandwiesenstraße 19
DE-64665 Alsbach-Hähnlein

customer service:
Erlenweg 3
DE-64665 Alsbach-Hähnlein

Tel.: +49 6257 9311-0
Fax: +49 6257 9311-8230

Email: international@reineckervision.de
www.reineckervision.com

SRN: DE-MF-000025998

In case service is necessary, please contact your authorized distributor.

Hersteller

Reinecker Vision GmbH
Zentrale

Vertrieb, Kundenberatung:
Sandwiesenstraße 19
64665 Alsbach-Hähnlein

Kundendienst:
Erlenweg 3
64665 Alsbach-Hähnlein

Tel.: 06257 93 11-0
Fax: 06257 93 11-8008

Email: info@reineckervision.de
www.reineckervision.de

SRN: DE-MF-000025998

Bitte wenden Sie sich bei Fragen oder einem Servicefall direkt an unser Hauptwerk in Alsbach-Hähnlein.

Bei im Ausland erworbenen Produkten kontaktieren Sie im Servicefall bitte Ihren dort ansässigen Händler.

Version 1.0, Stand 05/26, Art.-Nr. 00010322
Subject to change.