User manual

VERDE mezzo

EN



Please read this user manual carefully prior to installation, use and maintenance for your own safety and in order to avoid damages on your system.

REINECKER

VERDE – The environmentally friendly screen reading system

During the development of the VERDE series screen reading systems, a strong emphasis was placed on the responsible use of resources and materials.
In **collaboration with TÜV Hessen** and other partner companies, development, production, and recycling processes were specifically optimized. The result is **VERDE – a high-quality and particularly eco-friendly screen reading system**.

The VERDE series guarantees the use of at least **66% recycled materials**.
Thanks to state-of-the-art LED technology in both lighting and display, the system also features very low energy consumption. Naturally, the VERDE series meets the highest standards of quality and functionality.

The screen reading systems of the VERDE series offer three key advantages: they provide optimal support for all reading and writing tasks, help protect the environment, and at the same time reduce costs.

The VERDE Series – Good for the Environment

VERDE mezzo is an opto-electronic screen reading system designed to magnify text and images for both professional and long-term personal use. Documents and images are captured the integrated camera and displayed clearly on the monitor.

In line with the VERDE philosophy, sustainability plays a central role:

- At least 66% recycled materials and components are used.
- Development and production processes are optimized with a strong focus on environmental responsibility.
- Economy materials are utilized – these are materials of full quality with minor visual imperfections. They are not used in our premium series and would other wise be discarded.
- Advanced LED technology in both lighting and display ensures particularly low energy consumption.
- The product is delivered in previously used but fully functional packaging.

Content

VERDE – The environmentally friendly screen reading system 3
I. General information 5
I.I Safety advice 7
II. Safety instructions to avoid damage 9
III. Instructions for the reading system VERDE mezzo 10
Delivery content....10
Product overview....10
Installation of the system....10
Connection of the unit 11
Adjusting the Monitor....12
Alignment of the monitor 13
Alignment of the XY-table mezzo....13
Description of the controls....14
Controls at the base plate 14
Power switch ON / OFF....14
Monitor control panel....15
Left button: 15
Colour mode selection....15
Menu selection ON/OFF....15
Central Control Button:....16
Adjusting Magnification....16
Autofocus On/Off....16
Overview Mode....16
Right Control button: 16
Automatic Color Saturation Control....16
Contrast/Brightness 16
Line Ruler / Line Masking....17
Starting Up the VERDE mezzo 17
Mains operation 17
Switching On 17
Switching Off 17
Automatic Saving of Settings 17
Replacing the Lighting....17
Important: Power Supply Notice....17
Description of the menu settings mezzo Focus 18
Menu selection 18
Adjust menu settings 18
Explanation of the menu content....19
Menu settings 19
IV. Troubleshooting....23
V. Technische Details 23
VI. Warranty Information....24
Notes 25

I. General information

Important notes on the operation of the reading system VERDE mezzo!
Please read them carefully prior to the operation of the reading system!

Notes on the electromagnetic compatibility (EMC)

This reading system is suited for use in all set-ups including the domicile that are connected directly to a public power supply for buildings with residential purposes.

This reading system is designed for the use in the indicated electromagnetic environment. The user should ensure the use in the indicated environment.

This reading system operates on HF-Energy exclusively for its own function. Therefore the emitted interference of high frequency disturbances is very low and the interference with other appliances operated close-by is improbable. When operating the reading system simultaneously with other systems, however, the possibility of disturbances of the system or other systems should not be neglected.

For this reason it should be ensured that the system is not placed directly beside or on top of another system. If the set-up of this system in the proximity of medical, measuring devices cannot be avoided, the operator of these devices has to be informed that it is necessary to observe the performance of the system to control the conventional use of the system in the chosen set-up.

Electronic devices are sensitive towards electric discharge and towards high frequency electromagnetic fields

Attention: In order to avoid high frequency disturbances the operator should respect a minimum distance of one meter to portable and mobile HF-telecommunication devices. Please also see chapter: „Safety advice“ on page 7.

Storage of the user manual

The user manual is an essential part of your reading system. Please keep the booklet in a safe place for future reference.

Product Description

VERDE mezzo is an opto-electronic screen reading system designed to magnify text and images for both professional and long-term personal use. Documents and images are captured using the integrated camera and displayed on the monitor.

- The VERDE mezzo screen reading system delivers razor-sharp, high-resolution images in HD+ quality (1366 × 768 pixels).
- The focus camera magnifies text and images approximately 3x to 35x while maintaining excellent image quality, minimal noise, and reduced reflections on glossy surfaces.
- A three-dimensionally adjustable flat-screen monitor ensures a comfortable reading position.

Cleaning of the system

- Before cleaning, disconnect the unit from the power supply.
- Clean the device with a mild household cleaner and a microfiber cloth.
- Do not allow any liquids to enter the device.

Special advice for transport and storage

For safety reasons, the unit must only be shipped in the original packing. The unit must be stored in dry and closed rooms in the original packing.

The following conditions for transport and storage have to be respected:

- Air pressure 700 to 1000 hPa
- Temperature range +5°C to + 50°C
- Relative air humidity 30% to 80%

Important note on reading, capturing and playback of medication leaflets

Dosage and quantity information from medication leaflets, read from the screen or, if a read-aloud function in your system is available, played back, must always be checked and re-confirmed independently! Always ask your doctor, pharmacist or a person you trust about dosing of medications!

Power supply

Only use the original power supply which is included in the delivery by Reinecker Vision GmbH.

Caution: The use of any other power supply besides the original, might lead to an increased electro-magnetic emission and to product damage.

Purpose

This opto-electronic reading system is a medical device to assist with the reading and magnifying of printed text and pictures. Visually impaired people can compensate for their loss of visual acuity by using this device.

Medical device

This reading system is classified as a medical device, class I according to (EU) 2017/745, Annexe VIII, standard 13. For the distribution to countries outside the EU the respective country-specific guidelines have to be regarded.

Declaration of conformity, CE mark

CE

You can request a copy of the declaration of conformity in written form from Reinecker Vision GmbH, Sandwiesenstr. 19, 64665 Alsbach-Hähnlein or view it at www.reineckervision.de/eu-doc

Evolution and lifetime of products

The Medical Device Directive regulates by law that manufacturers of medical devices shall determine a period of safety operation of a product. We fulfill hereby legal requirements and determine - for formal reasons - a period of three years after date of first purchase.

Note:
The mentioned life span does not reflect the complete life span of the system. It is rather an indication on when the product might be obsolete and substitution might be recommended due to new product developments.

Combination with other medical products

If the operator/user wants to operate this device in conjunction with other life sustaining medical devices, please get in touch with Reinecker Vision GmbH or with your local dealer, prior to operation.

I.I Safety advice

The device has to be set up and operated in closed and dry rooms only. Do not plug the device into an electrical circuit that is also being used for any life sustaining or support systems. The device may not be used in the patients environment.

This device should not be operated in explosion-endangered environments.
This device should only be installed in conjunction with a state-of-the-art electrical circuit.

Precautions by alteration of the performance of the system

Should any of the technical features or performances change (failure, malfunction etc.), the device must be turned OFF and the battery must be taken out.
Please do not switch ON the device again. Refer directly to your authorized dealer or to Reinecker Vision GmbH Service Center.

Reinstatement / installation and maintenance

This device may be technically maintained and reconditioned by Reinecker Vision GmbH only or by an authorized technician. Reinstatement may only take place after the system has been cleaned and safety checked.

Environmentally friendly disposal (Directive 2012/19/EU)



MD

Within the EU the respective national implementations of the Directive 2012/19/EU for the sustainable re-use and proper recycling of electrical and electronic equipment applies.
For countries outside the EU (e.g. Switzerland), the respective national implementations for the regulatory requirements for environmentally friendly disposal and recycling applies.

List of symbols used

	Manufacturer	REF	Catalogue Number
#	Model number		Caution
SN	Serial number	UDI	Unique Device Identifier
MD	Medical device		Temperature limit
	Consult instructions for use		

II. Safety instructions to avoid damage

Please respect the following instructions for your own safety:

1. Do not plug the AC adapter into a faulty electrical outlet. Doing so may cause electrical shock or fire.
2. Do not touch the AC adapter with wet hands.
3. Only use the original power supply and cables which are included in the delivery by Reinecker Vision GmbH. The use of any other equipment might lead to a product damage.
4. Do not expose the system to direct sunlight or to very hot or cold environment, as this would harm the picture quality.
5. Do not operate this device below +5°C or above +40°C.
6. No liquids must reach the interior of the system. Only operate the device in a dry environment.
7. The device may not be operated next to medical devices (patients environment).
8. Do not lean on the screen, touch the screen with any object or lay heavy objects on the device. This may cause damage to the device.
9. Do not try to repair or to dismantle the system by your own. This would automatically void the warranty. If you need any technical assistance please get in contact with the local distributor or with Reinecker Vision GmbH.
10. Always switch OFF the system and disconnect it from the power supply before cleaning it. Only use a soft and slightly damped cloth. Only use a mild household detergent. Do not use alcohol containing or strong detergents.

III. Instructions for the reading system VERDE mezzo

Delivery content

- Reading system VERDE mezzo
- Power adapter 12V DC / 5000mA
- Adapter cable (country-specific)
- User manual / Service information

Product overview

- VERDE mezzo 19" **VERMEZ01**

Installation of the system

Unpack your VERDE mezzo carefully and place it on a solid horizontal surface.
If you have not purchased an optionally available stand that fits to the product you must provide a solid surface for the system with sufficient surface area.

Set up your mezzo as described below:

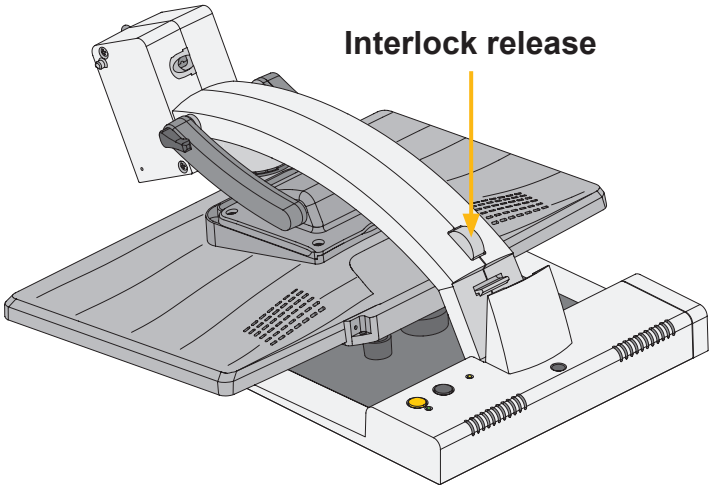

- Folded VERDE mezzo for transport.

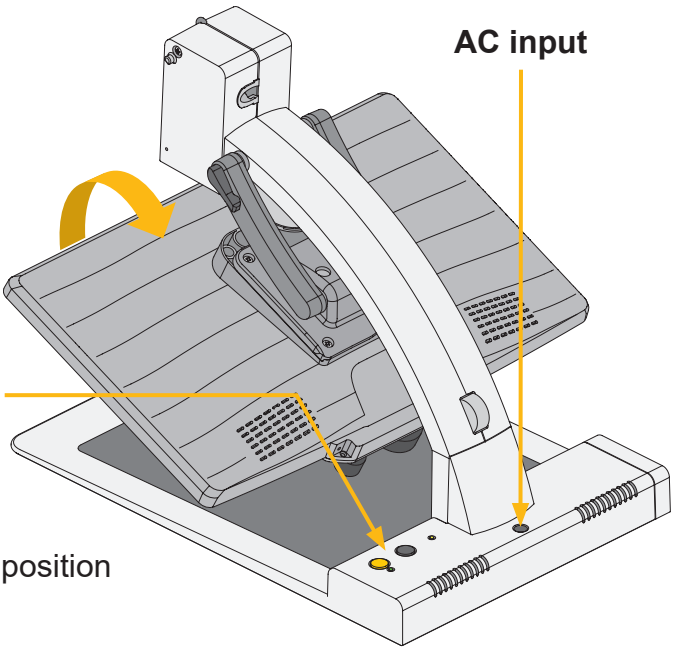

- Bring the monitors arm in the upright position until the interlock release snaps in.

- Release the locking lever and tilt the monitor upward.

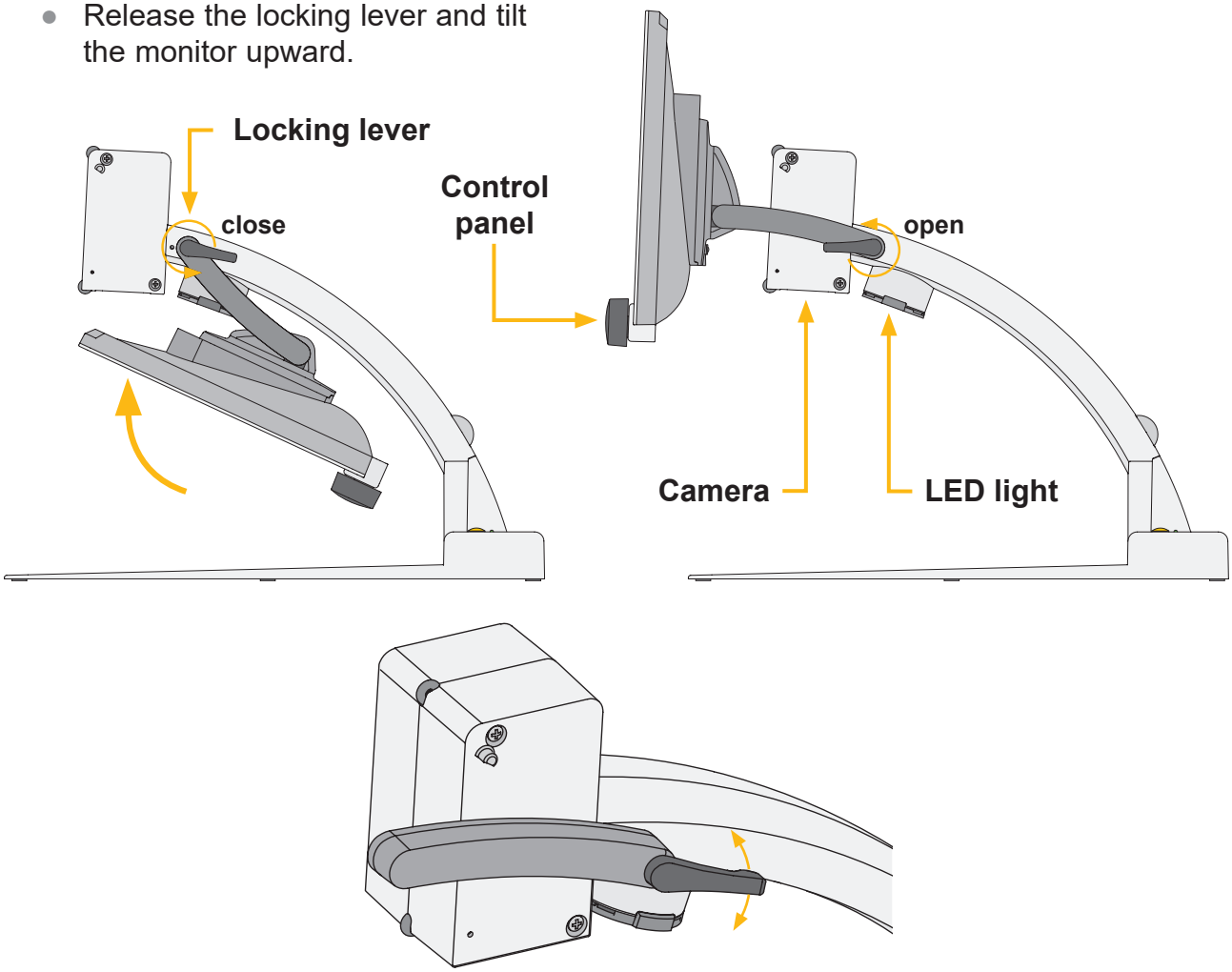

Connection of the unit

Connect the power supply to a mains wall socket and plug the adapter end of the cable into the AC input socket (12V DC) located on the base plate of the VERDE mezzo.

Note:
The supplied plug-in power supply is exclusively for the operation of this device. Please do not use any other power adaptor or cable. Once the device is plugged in, it is ready to use.

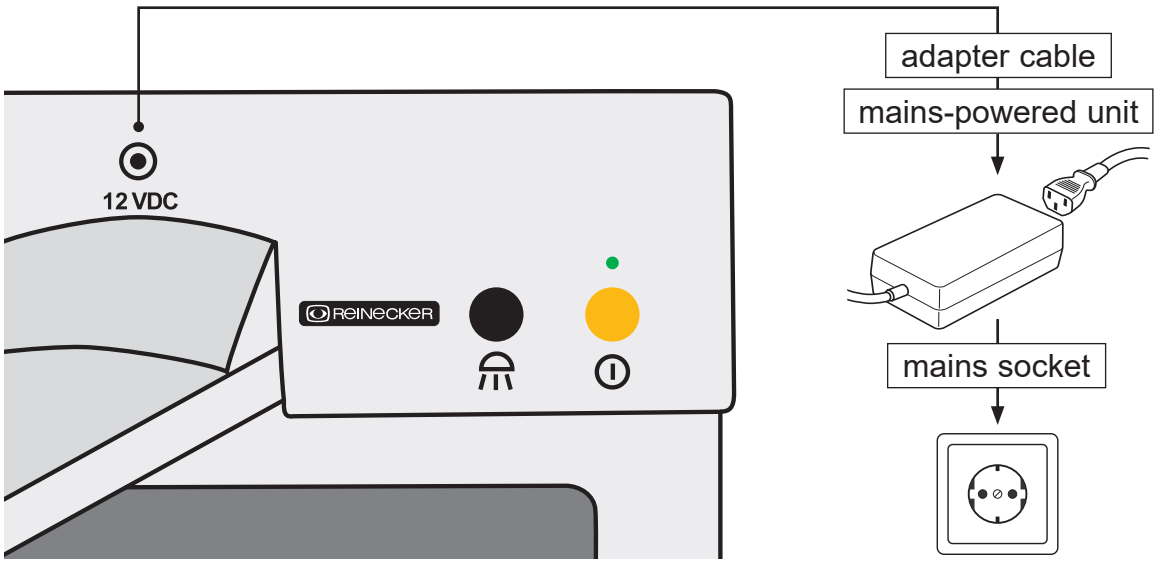

Adjusting the Monitor

Due to the screen technology, contrast and brightness vary depending on the viewing angle.

The highly flexible monitor arm allows the user to adjust the monitor's height and tilt according to their seating position.

All positions can be set using the three-dimensionally adjustable monitor.

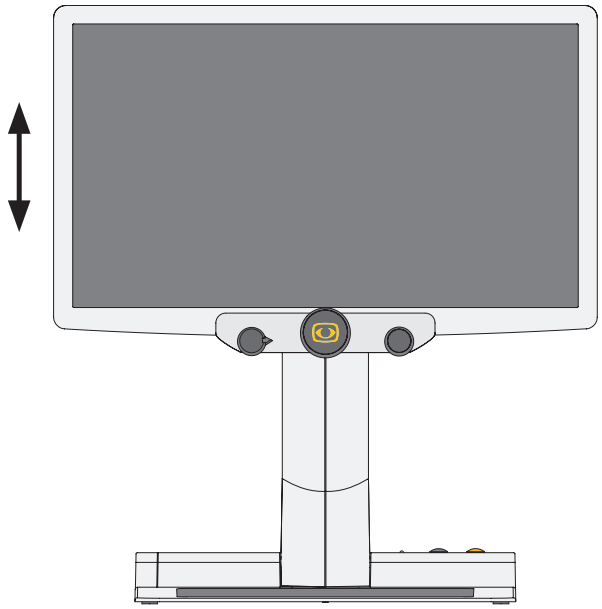

- The monitor can be moved vertically up and down.

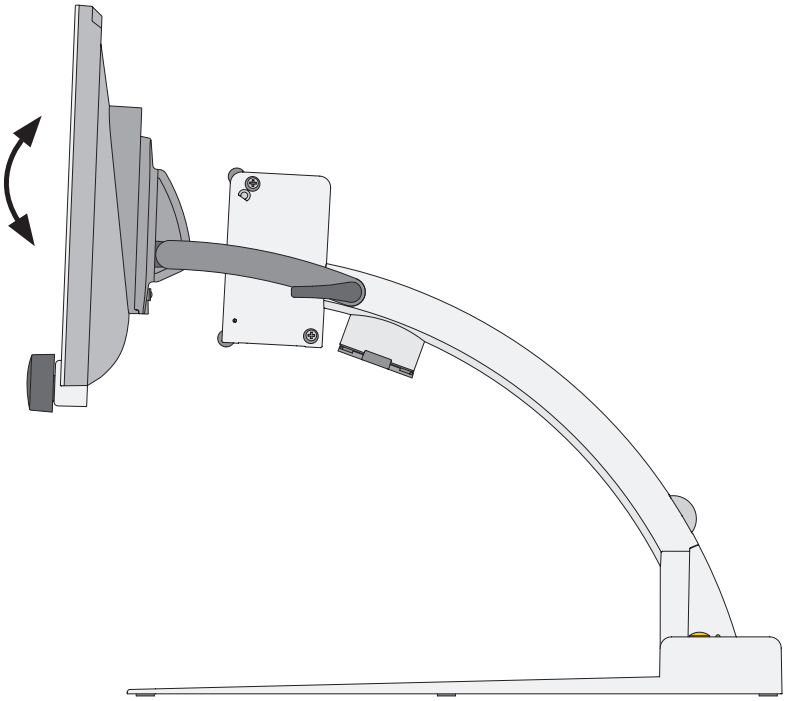

- The monitor can be tilted vertically.

Alignment of the monitor

Due to the monitor's technology, contrast and brightness change depending on the angle of view.

The highly flexible monitor arm enables the user to adjust the monitor according to the seating position.

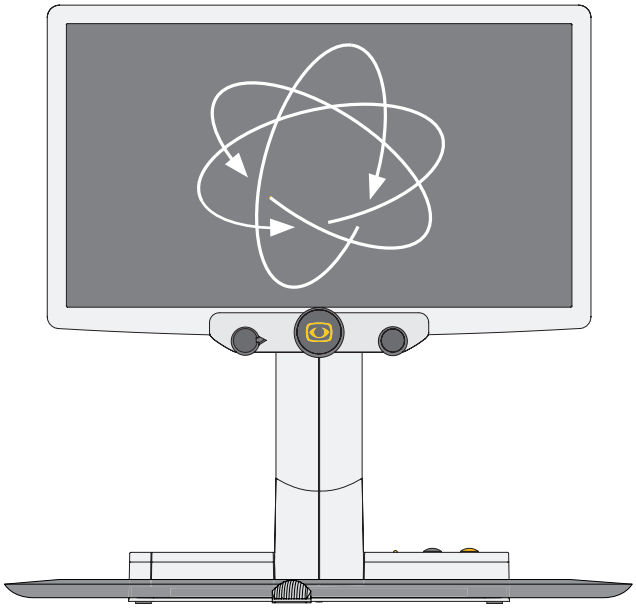

Alignment of the XY-table mezzo

If your mezzo has a XY-table (ZBXTFIX0 or ZBXTFIXM) with friction brakes, the friction can be continuously adjusted with the lever located in front of the table by pushing the lever slowly from the left to the right.

By pushing the lever from the very left side (no friction at all) to the center, you will fix the y-axis. By pushing the lever to the very right side, you will also fix the x-axis (lock).

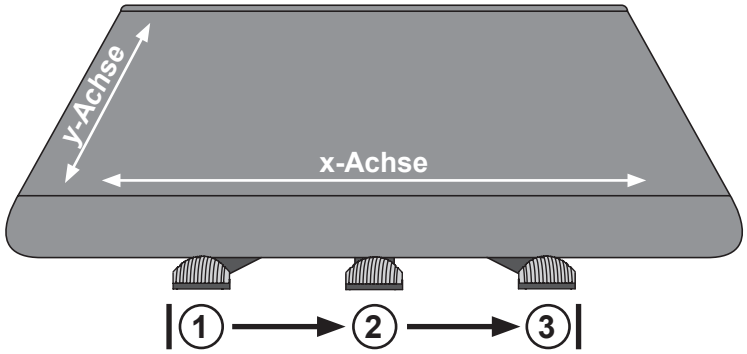

1. Left: no friction at all

2. Left to center: fixing the y-axis

3. Center to right: fixing the x- and y-axis (lock)

Description of the controls

Controls at the base plate

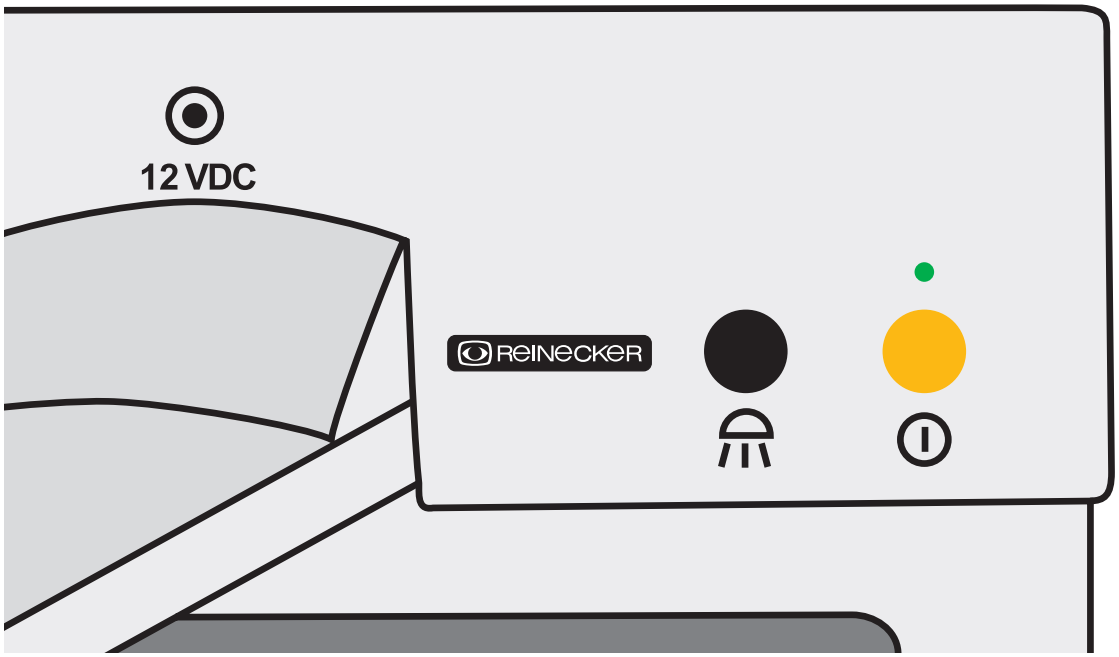

Power switch ON/OFF

The device can be switched ON or OFF by briefly pressing the yellow button. When the device is switched ON the green LED lights on.

When the device will be turned OFF, the latest used settings are saved automatically. When switching ON again, the latest used settings are reactivated.

Attention!:
If the reading table is not lit up after switching ON the device, please check if the LED-light is ON (please see next paragraph).

Light adjustment (ON/OFF/Dim)

By pressing the black button briefly the illumination can be turned ON or OFF.

By pressing and holding the black button, the illumination can be dimmed. When releasing the black button, the illumination intensity will be set and saved.

Please note:
The latest used illumination will be reactivated when turning the device ON the next time.

Monitor control panel

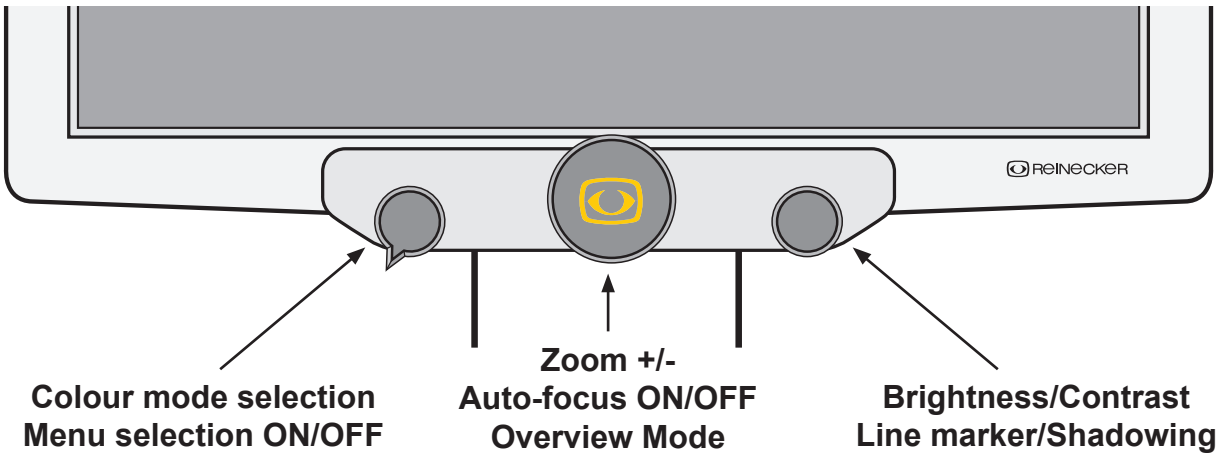

Left button:

Colour mode selection

By turning the colour mode selection-button from the left to the right the following colour modes (factory setting) can be selected:



Position 1: full colour display
Position 2: black font, white background
Position 3: white font, black background
Position 4: green font, black background
Position 5: yellow font, black background
Position 6: yellow font, blue background

The chosen colour mode appears temporarily on the lower side of the screen (when activated).

Note: Individual colour combinations can be defined via the internal menu.
You also have the possibility to reduce the colour combinations. If you, for example, reduce the 6 combinations to four, these four combinations are evenly divided on the positions of the button.

Menu selection ON/OFF

Keep the left button pressed for approx. 2 sec. to enter the internal menu.
To exit, turn the central button to the menu selection “exit” and press the central button briefly to confirm exit.

Central Control Button:

Adjusting Magnification

The central control button allows continuous adjustment of magnification from minimum to maximum (turn from left to right).

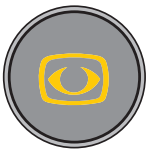

The magnification range is approximately 3x to 35x, depending on the distance between the reading material and the camera.

The last selected magnification level is saved and remains active when the device is switched on again.

Note: The camera automatically adjusts to the optimal focus within its imaging range. At maximum magnification, the camera provides a sharp image for materials up to approximately 7 cm in height. This can be further improved by adjusting the settings in the menu or by switching to false color mode.

Autofocus On/Off

Briefly pressing the central control button activates the automatic focusing function.

Overview Mode

If you are working with high magnification and lose track of which area of the document is being enlarged, this function provides orientation.

Press and hold the central control knob for approximately 2 seconds until overview mode starts and the image on the monitor is reduced in size.

A crosshair in the center of the image indicates which area is currently magnified. When the knob is released, the system returns to normal mode with the previously selected magnification.

Right Control button:

Automatic Color Saturation Control

The electronics automatically adjust color saturation to ensure accurate color reproduction.

Contrast/Brightness



The right control button adjusts contrast and brightness simultaneously, affecting both light and dark areas of the image equally (turn from left to right).

Low contrast and low brightness (fully left), maximum contrast and maximum brightness (fully right).

Line Ruler / Line Masking

Pressing the control button activates the line ruler / line masking function.

From the left stop position of the control button to the center position, line masking is active, gradually covering the display evenly from the top and bottom.

From the center position to the right, the line ruler is active and can be adjusted across the entire screen.

Pressing the control button again deactivates the line ruler / line masking function.

Starting Up the VERDE mezzo

Mains operation

For mains operation, ensure that the supplied power adapter is connected both to the electrical outlet and to the power input socket (12 VDC) of the VERDE mezzo.

Switching On

Press the power on/off switch to turn on the device.

Once the device is switched on and the reading table is illuminated, you can place a document or object on the table.

All previously described settings, such as zoom, colors, or brightness, can be individually adjusted.

Switching Off

Press the power on/off switch to turn off the device.

Automatic Saving of Settings

All last-used device settings are automatically restored when the device is switched on again.

Replacing the Lighting

The reading system is equipped with high-performance LED lighting.

If replacement becomes necessary, it must be carried out by an authorized specialist or the service department of Reinecker Vision GmbH.

Important: Power Supply Notice

Always use the power adapter supplied with the VERDE mezzo for operation.

Description of the menu settings mezzo Focus

Menu selection



Press the colour selection button for approx. 3 seconds until the menu appears on the screen.

Main Menu	
Colour Saturation	+50
Language	English
AF Mode	auto
Min. magnification	standard
Max. magnification	standard
Grid Frequency	50Hz
Monitor Brightness	80%
Reset to Factory Settings	
Advanced Settings	
Exit	

Adjust menu settings

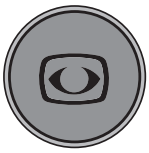

Move up/down the menu
Turn the central zoom button in order to navigate through the menu (to be turned endlessly either to the left or to the right).

Select an item in the menu
Press the central zoom button in order to open the menu selection.

Change menu selection
Turn the central zoom button in order to change menu settings.

Confirm and select the menu selection
Press the central zoom button in order to confirm menu settings.

Exit main menu
Navigate to “exit menu” in order to quit.

Note: You can alternatively press the colour mode button shortly to exit the menu.

Explanation of the menu content

The image shows in detail how the menu is structured.

Main Menu	← Menu level 1
Advanced Settings	← Menu level 2
Special Settings	← Menu level 3
Customize Buttons	← Menu level 4
Function	**adjustment range** | explication

Menu settings

Main Menu	
Brightness	**Brightness adjustment range from -50 to +50**
Contrast	**Brightness adjustment range from -50 to +50**
Colour Saturation	**Brightness adjustment range from -50 to +50**
Ruler / Mask	**OFF** | deactivate line marker and shadowing **Ruler** | activate line marker **Mask** | activate shadowing

Main Menu	
Ruler / Mask Settings	
Ruler / Mask	**OFF** | deactivate line marker and shadowing **Ruler** | activate line marker **Mask** | activate shadowing
Ruler Position	**0 to 100** | adjust line marker position
Mask Position	**0 to 100** | adjust shadowing
Ruler Mode	**Horizontal** | Lineal horizontal ausrichten **Vertikal** | Lineal vertikal ausrichten
Mask Mode	**Left/Right** | Shadowing left/right; shadowing up to 50% **Top/Bottom** | Shadowing top/bottom; shadowing up to 50% **Left/Right FS** | Shadowing left/right; shadowing up to 90% **Top/Bottom FS** | Shadowing top/bottom; shadowing up to 90% **Full-Screen** | Shadowing covers whole screen
Mask Transparency	**50%** | **25%** | **0%**

Main Menu	
Ruler / Mask Settings	
Ruler Colour	
Red	adjustment range from 0 to 31
Green	adjustment range from 0 to 31
Blue	adjustment range from 0 to 31
Return	

Main Menu	
AF Mode	Semi-Automatic | Semi-Autom. + Zoom | Continuous/Zoom
Reset to Factory Settings	Return to factory settings
Recall User Settings	Return to customer selected settings
Advanced Settings	*(see overview)*
Exit	

Overview:	Advanced Settings	
	Colour Combination Setup	
	Anti Reflection Mode	Auto (5)
	Monitor Brightness	100
	Language	English
	Perform White Balance	
	White Balance Mode	Auto
	Sharpness Settings	
	OSD Messages	OFF
	Special Settings	
	Return	

Main Menu	
Advanced Settings	
Colour Combination Setup	
Colour Combination 1-6	
Mode	**Disabled** | **Full Colour** | **Grayscale** | **False Colour**
Foreground	**Black** | **Red** | **Green** | **Blue** | **Yellow** | **Magenta** | **Cyan** | **White** | **User 1** | **User 2**
Background	**Black** | **Red** | **Green** | **Blue** | **Yellow** | **Magenta** | **Cyan** | **White** | **User 1** | **User 2**
Swap Fore-/ Background	invert foreground and background colours
Return	

Main Menu	
Advanced Settings	
Colour Combination Setup	
User colours	
User colour 1 - Red	**adjustment range from 0 to 31**
User colour 1 - Green	**adjustment range from 0 to 31**
User colour 1 - Blue	**adjustment range from 0 to 31**
User colour 2 - Red	**adjustment range from 0 to 31**
User colour 2 - Green	**adjustment range from 0 to 31**
User colour 2 - Blue	**adjustment range from 0 to 31**
Return	

Main Menu	
Advanced Settings	
Anti-Reflection Mode	**OFF** | **ON** | **Auto (0-9)** | adjust default value
Monitor Brightness	**adjustment range from 37 to 100**
Language	**English** | **German** | **French** | **Norwegian**
Perform White Balance	execute white balance
White Balance Mode	**Auto** | **One-Push**

Main Menu	
Advanced Settings	
Sharpness Settings	
Real Colour Sharpness	**adjustment range from 0 to 24**
False Colour Sharpness	**adjustment range from 0 to 24**
Return	

Main Menu	
Advanced Settings	
OSD Messages	**ON** | **OFF**
Special Settings	*(see overview)*
Return	

Overview:	Special Settings	
	Zoom Extension	ON
	Max. Digital Zoom	3.5x
	Customize Buttons	
	Store User Settings	
	Recall User Settings	
	Reset to Factory Settings	
	Expert Settings	
	Monitor size	19"
	Return	

Main Menu	
Advanced Settings	
Special Settings	
Zoom Extension	**ON** | **OFF**
Max. Digital Zoom	**OFF** | adjustment range from 1,5x to 15x

Main Menu	
Advanced Settings	
Special Settings	
Store User Settings	Confirm selection to the user setting to save
Recall User Settings	Confirm selection to the user setting restore
Reset to Factory Settings	Confirm to the factory setting restore
Expert Settings	Access - only by authorized service
Monitor size	**19"**
Return	

IV. Troubleshooting

Problems	Solution
No image is shown	Check the mains connection, the cable connection to the monitor and that all relevant systems are switched ON or activated.
Screen is dark	Check the brightness and contrast settings of the camera/monitor.
True colour is not displayed correctly	Check your reading material, colour mode setting, brightness, colour saturation and camera lighting.

V. Technische Details

VERDE mezzo **19" class monitor**	LED flat screen monitor 19" class | approx. 48 cm (1360 × 768 pixels) height-adjustable, vertically tiltable	Weight: approx. 9,5 kg incl. XY-table Dimensions (W×H×D) assembled: approx. 54×44×54 cm Dimensions (W×H×D) folded: approx. 54×22×54 cm
Farbmodus **Autofokus**	Echtfarben, voreingestellte und benutzerdefinierte Fehlfarbmodi abschaltbar	

VI. Warranty Information

1. Reinecker Vision GmbH grants a warranty of 24 months (warranty period only valid within the European Union) against defects in manufacture counted from date of invoice ex Reinecker Vision GmbH.

2. All parts that have been replaced when repairing the unit will automatically become property of Reinecker Vision GmbH.

3. Damage caused by improper use or by non-compliance with the operating instructions will result in the invalidation of the warranty.

4. Interventions from persons other than Reinecker Vision GmbH authorised specialists may lead to invalidity of warranty.

5. Partial warranty is valid for light sources serving to illuminate the reading object, batteries and other parts subject to wear and tear.

6. If a warranty claim is necessary, the system has to be returned to the manufacturer in Alsbach-Hähnlein or to your authorized dealer in the original packaging including all components. The manufacturer does not carry the cost for transport, packaging and insurance.

Phone number: +49 6257 93110

View our General Terms and Conditions.

Your authorized distributor:

Notes

Type:	**VERMEZ01**
Serial number:	
Manufacturer:	Reinecker Vision GmbH
Final examination:	
Power supply:	100 VAC – 240 VAC 50-60 Hz
With plug-in power supply:	12V DC/5000mA
Power consumption:	max. 80 watt

Manufacture

Reinecker Vision GmbH
International Contact

sales department, customer relations:
Sandwiesenstraße 19
DE-64665 Alsbach-Hähnlein

customer service:
Erlenweg 3
DE-64665 Alsbach-Hähnlein

Tel.: +49 6257 9311-0
Fax: +49 6257 9311-8230

Email: international@reineckervision.de
www.reineckervision.com

SRN: DE-MF-000025998

In case service is necessary, please contact your authorized distributor.

Hersteller

Reinecker Vision GmbH
Zentrale

Vertrieb, Kundenberatung:
Sandwiesenstraße 19
64665 Alsbach-Hähnlein

Kundendienst:
Erlenweg 3
64665 Alsbach-Hähnlein

Tel.: 06257 93 11-0
Fax: 06257 93 11-8008

Email: info@reineckervision.de
www.reineckervision.de

SRN: DE-MF-000025998

Bitte wenden Sie sich bei Fragen oder einem Servicefall direkt an unser Hauptwerk in Alsbach-Hähnlein.

Bei im Ausland erworbenen Produkten kontaktieren Sie im Servicefall bitte Ihren dort ansässigen Händler.

Version 1.0, Stand 05/26, Art.-Nr. 00010302
Subject to change..

REINECKER