User manual

VEO UNO 24

EN



Please read this user manual carefully prior to installation, use and maintenance for your own safety and in order to avoid damages on your system.

REINECKER

Content

I. General information 4
I.I General Information – valid for VEOUNO241 6
I.II General Information – valid for VEOUNO241LV 8
II. Safety instructions to avoid damage 9
III. Instructions for the video magnifier system VEO UNO 10
Delivery content 10
Camera 10
Setting up and folding the video magnifier 10
Folding down 11
Connection of the unit 12
Alignment of monitor 12
Alignment of the xy-table VEO UNO 13
Description of the control elements 14
Switching the device ON/OFF 14
Lighting 14
Menu ON/OFF 14
Monitor control panel 15
Left button: 15
Colour mode selection 15
Switching between true colours and artificial colours 15
Central button: 16
Zoom +/- 16
Overview mode 16
Right button: 16
Automatic colour saturation 16
Brightness/Contrast 16
Line marker and shadowing 17
Operation with power supply and cables 17
Power ON 17
Power OFF 17
Automatic saving of device settings 17
Replacement of lighting 17
Important note to the use of power supply 17
Description of the menu settings VEO UNO 18
Menu selection 18
Adjust menu settings 18
Explanation of the menu content 19
Menu settings 19
IV. Troubleshooting 21
V. Technical details 21
VI. Warranty Information 23

I. General information

Important notes on the operation of the reading system VEO UNO 24!
Please read them carefully prior to the operation of the reading system!

Notes on the electromagnetic compatibility (EMC)

This reading system is suited for use in all set-ups including the domicile that are connected directly to a public power supply for buildings with residential purposes.

This reading system is designed for the use in the indicated electromagnetic environment. The user should ensure the use in the indicated environment.

This reading system operates on HF-Energy exclusively for its own function. Therefore the emitted interference of high frequency disturbances is very low and the interference with other appliances operated close-by is improbable. When operating the reading system simultaneously with other systems, however, the possibility of disturbances of the system or other systems should not be neglected.

For this reason it should be ensured that the system is not placed directly beside or on top of another system. If the set-up of this system in the proximity of medical, measuring devices cannot be avoided, the operator of these devices has to be informed that it is necessary to observe the performance of the system to control the conventional use of the system in the chosen set-up.

Electronic devices are sensitive towards electric discharge and towards high frequency electromagnetic fields

Attention: In order to avoid high frequency disturbances the operator should respect a minimum distance of one meter to portable and mobile HF-telecommunication devices. Please also see chapter: „Safety advice“ on page 6 or on page 8.

Storage of the user manual

The user manual is an essential part of your reading system. Please keep the booklet in a safe place for future reference.

Product description

VEO UNO is a compact desktop video magnifier system, which magnifies text and pictures. It may be used permanently for private and professional appliance. The text or pictures are being captured by the integrated camera and then displayed on the monitor.

- VEO UNO delivers razor-sharp picture quality in high resolution and through its user friendliness.
- FullHD camera magnifies text and pictures in the best picture quality, a minimum of picture noise and a high reduction of reflections when reading glossy papers or looking at glossy surfaces.
- The high-resolution LED flat screen monitor is infinitely adjustable and can be easily moved into the desired position.
- Due to its compact design and folding mechanism, VEO UNO can be easily installed and transported.
- The integrated xy-table significantly increases the user comfort.

Cleaning of the system

- Before cleaning, disconnect the unit from the power supply.
- Clean the device with a mild household cleaner and a microfiber cloth.
- Do not allow any liquids to enter the device.

Special advice for transport and storage

For safety reasons, the unit must only be shipped in the original packing. The unit must be stored in dry and closed rooms in the original packing.

The following conditions for transport and storage have to be respected:

- Air pressure 700 to 1000 hPa
- Temperature range +5°C to + 50°C
- Relative air humidity 30% to 80%

Important note on reading, capturing and playback of medication leaflets

Dosage and quantity information from medication leaflets, read from the screen or, if a read-aloud function in your system is available, played back, must always be checked and re-confirmed independently! Always ask your doctor, pharmacist or a person you trust about dosing of medications!

Power supply

Only use the original power supply which is included in the delivery by Reinecker Vision GmbH.

Caution: The use of any other power supply besides the original, might lead to an increased electro-magnetic emission and to product damage.

I.I General Information – valid for VEOUNO241

The order code of your device can be found on the type label on the device or on the packaging.

Purpose

This opto-electronic reading system is a medical device to assist with the reading and magnifying of printed text and pictures. Visually impaired people can compensate for their loss of visual acuity by using this device.

Medical device

This reading system is classified as a medical device, class I according to (EU) 2017/745, Annexe VIII, standard 13. For the distribution to countries outside the EU the respective country-specific guidelines have to be regarded.

Declaration of conformity, CE mark

CE

You can request a copy of the declaration of conformity in written form from Reinecker Vision GmbH, Sandwiesenstr. 19, 64665 Alsbach-Hähnlein or view it at www.reineckervision.de/eu-doc

Evolution and lifetime of products

The Medical Device Directive regulates by law that manufacturers of medical devices shall determine a period of safety operation of a product. We fulfill hereby legal requirements and determine - for formal reasons - a period of three years after date of first purchase.

Note:
The mentioned life span does not reflect the complete life span of the system. It is rather an indication on when the product might be obsolete and substitution might be recommended due to new product developments.

Combination with other medical products

If the operator/user wants to operate this device in conjunction with other life sustaining medical devices, please get in touch with Reinecker Vision GmbH or with your local dealer, prior to operation.

Safety advice

The device has to be set up and operated in closed and dry rooms only. Do not plug the device into an electrical circuit that is also being used for any life sustaining or support systems. The device may not be used in the patients environment.

This device should not be operated in explosion-endangered environments.
This device should only be installed in conjunction with a state-of-the-art electrical circuit.

Precautions by alteration of the performance of the system

Should any of the technical features or performances change (failure, malfunction etc.), the device must be turned OFF and the battery must be taken out.
Please do not switch ON the device again. Refer directly to your authorized dealer or to Reinecker Vision GmbH Service Center.

Reinstatement / installation and maintenance

This device may be technically maintained and reconditioned by Reinecker Vision GmbH only or by an authorized technician. Reinstatement may only take place after the system has been cleaned and safety checked.

Environmentally friendly disposal (Directive 2012/19/EU)



MD

Within the EU the respective national implementations of the Directive 2012/19/EU for the sustainable re-use and proper recycling of electrical and electronic equipment applies.
For countries outside the EU (e.g. Switzerland), the respective national implementations for the regulatory requirements for environmentally friendly disposal and recycling applies.

List of symbols used

	Manufacturer	REF	Catalogue Number
#	Model number		Caution
SN	Serial number	UDI	Unique Device Identifier
MD	Medical device		Temperature limit
	Consult instructions for use		

I.II General Information – valid for VEOUNO241LV

The order code of your device can be found on the type label on the device or on the packaging.

Purpose

The VEO UNO opto-electronic reading system is a system for magnifying of printed text and pictures.

Declaration of conformity (DoC), CE mark

CE

You can request a copy of the declaration of conformity in written form from Reinecker Vision GmbH, Sandwiesenstr. 19, 64665 Alsbach-Hähnlein or view it at www.reineckervision.de/int-doc

Safety advice

The device may only be set up and operated in closed and dry rooms. The device should not be operated in explosion-endangered environments.The device may only be connected to a state-of-the-art circuit.

Repair and maintenance

The device may only be serviced and repaired by Reinecker Vision GmbH or an authorized dealer.

Environmentally friendly disposal



The device contains electronic components.
To avoid environmental damage, the respective country-specific laws and regulations for the disposal of the device must be respected.

II. Safety instructions to avoid damage

Please respect the following instructions for your own safety:

1. Do not plug the AC adapter into a faulty electrical outlet. Doing so may cause electrical shock or fire.
2. Do not touch the AC adapter with wet hands.
3. Only use the original power supply and cables which are included in the delivery by Reinecker Vision GmbH. The use of any other equipment might lead to a product damage.
4. Do not expose the system to direct sunlight or to very hot or cold environment, as this would harm the picture quality.
5. Do not operate this device below +5°C or above +40°C.
6. No liquids must reach the interior of the system. Only operate the device in a dry environment.
7. The device may not be operated next to medical devices (patients environment).
8. Do not lean on the screen, touch the screen with any object or lay heavy objects on the device. This may cause damage to the device.
9. Do not try to repair or to dismantle the system by your own. This would automatically void the warranty. If you need any technical assistance please get in contact with the local distributor or with Reinecker Vision GmbH.
10. Always switch OFF the system and disconnect it from the power supply before cleaning it. Only use a soft and slightly damped cloth. Only use a mild household detergent. Do not use alcohol containing or strong detergents.

III. Instructions for the video magnifier system VEO UNO

Delivery content

- Reading system VEO UNO
- LED flat screen 24" - class monitor (61.5 cm)
- Power adapter USB-C PD 65 W
- Adapter cable (country-specific)
- User manual / Service information

Camera

FullHD camera with digital zoom/auto-focus

- Magnification:
  VEO UNO 24-class incl. xy-table: approx. 1.8x - 43x more magnification options to be adjusted within the internal menu
- LVHD - Technology: high-contrast, flicker-free image in FullHD quality.
  The optimal image processing technology minimizes “drag” of the image and thus guarantees a trouble-free image in all magnification levels.

Setting up and folding the video magnifier

Unpack your VEO UNO carefully and place it on a solid horizontal surface. If you have not purchased an optionally available stand that fits to the product you must provide a solid surface for the system with sufficient surface area.

Set up your VEO UNO as described below:

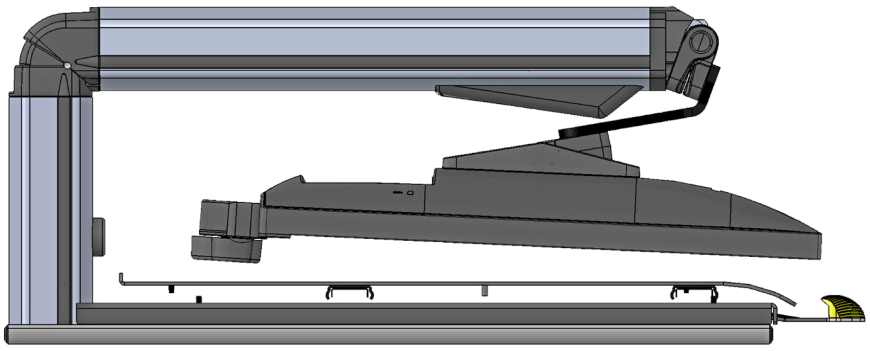

- Folded VEO UNO for transport.

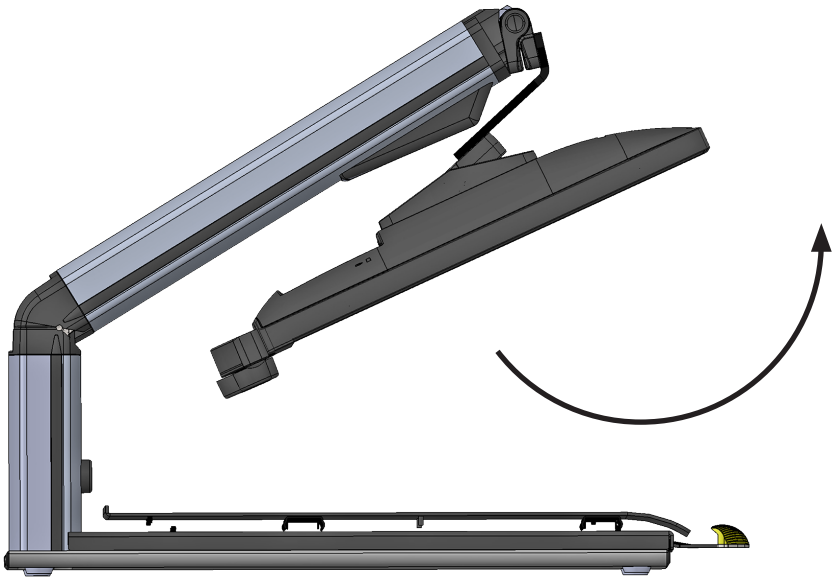

- Raise the camera tripod until the arm fully clicks into place. Swivel the monitor upwards.

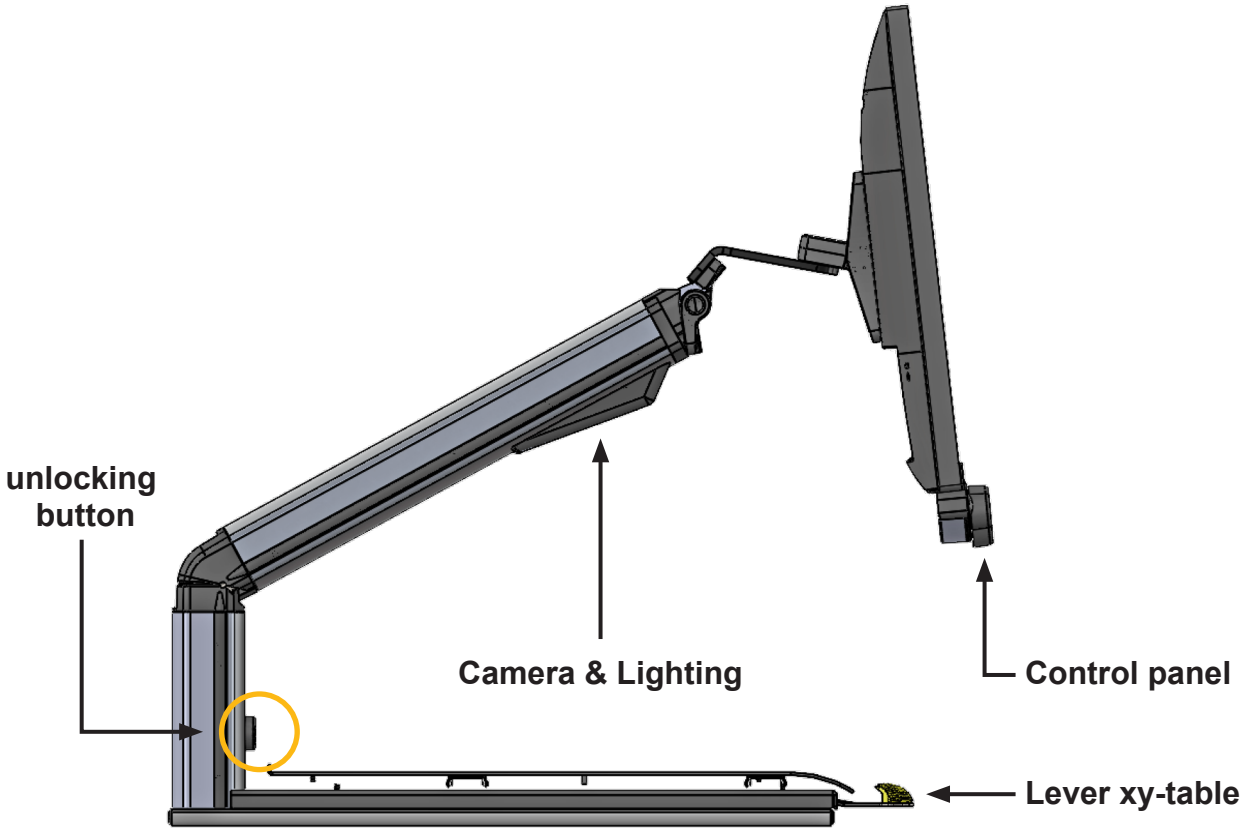

Folding down:

- **Bring the monitor into transport position:** Fold the monitor below until it is parallel to the arm.
- **Hold the unlocking button pressed:** The button is located at the joint of the monitor arm.
- **Simultaneously lift the arm slightly:** While holding the button pressed, lift the arm a small distance upward. This releases the tension from the locking mechanism, allowing it to disengage.
- **Fold the arm down:** Once the locking mechanism is released, you can guide the arm down into the transport position.

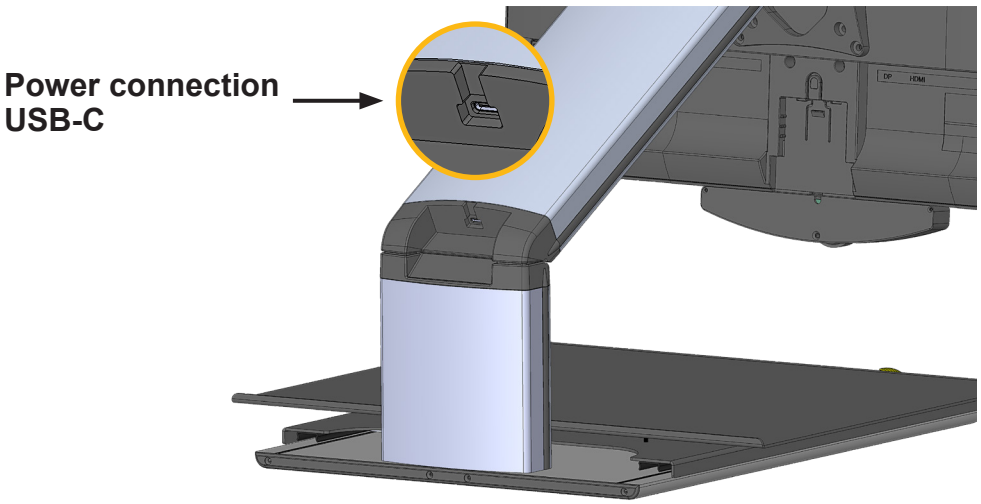

Connection of the unit

Connect the included power adapter to an external power supply and plug the plug into the USB-C socket.

Note:
The supplied plug-in power supply is exclusively for the operation of this device. Please do not use any other power adaptor or cable. Once the device is plugged in, it is ready to use.

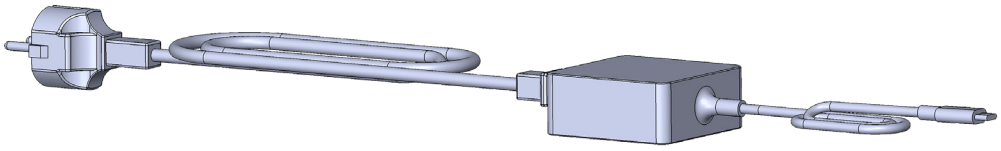

Alignment of monitor

Due to the monitor's technology contrast and brightness adjust depending on the angle of view.

The highly flexible monitor arm enables you to adjust the monitors height and angle according to your best ergonomic position.

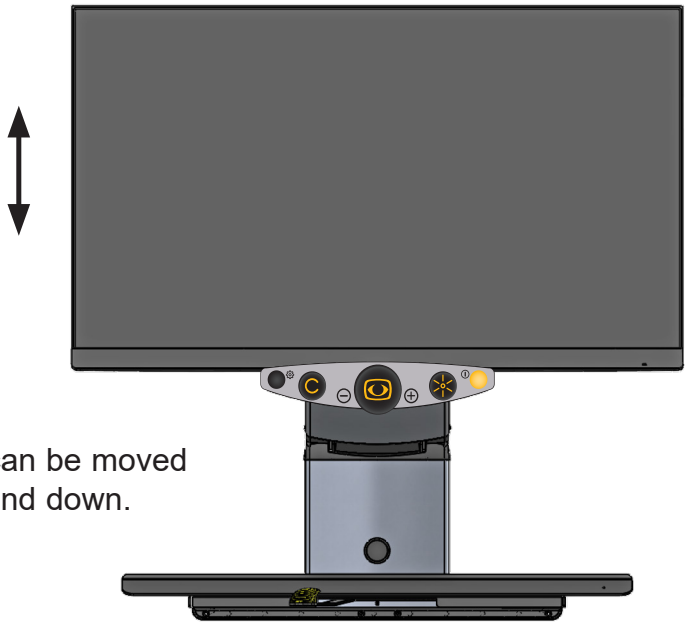

- The monitor can be moved vertically up and down.

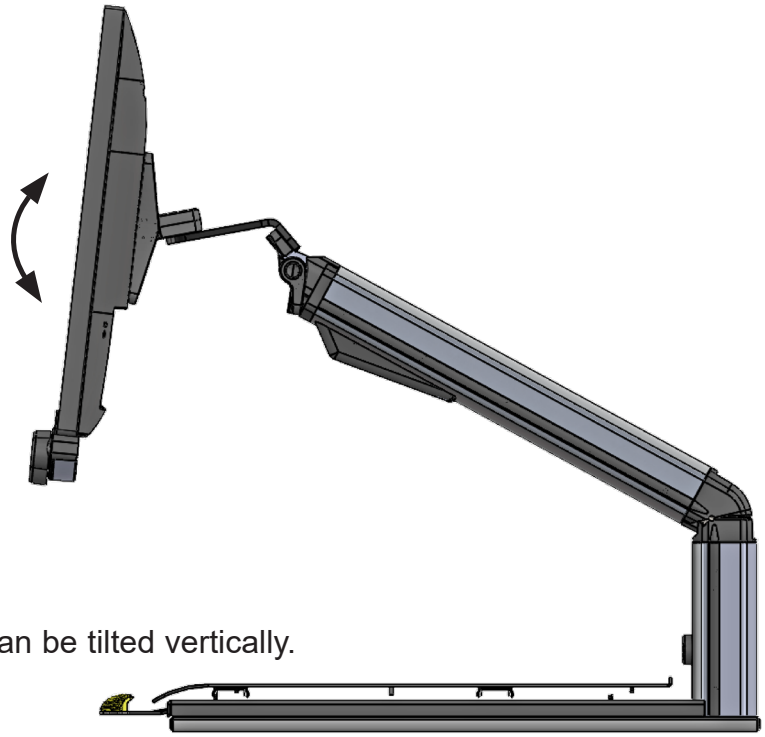

- The monitor can be tilted vertically.

Alignment of the xy-table VEO UNO

The xy-table is equipped with a continuously adjustable friction brake. The yellow locking lever can be moved continuously from zero to maximum and influences the braking intensity of the x- and y-axis. This works by sliding the lever slowly from left to right. By pushing the lever from the very left side (no friction at all) to the center, you will fix the y-axis. By pushing the lever to the very right side, you will also fix the x-axis (lock).

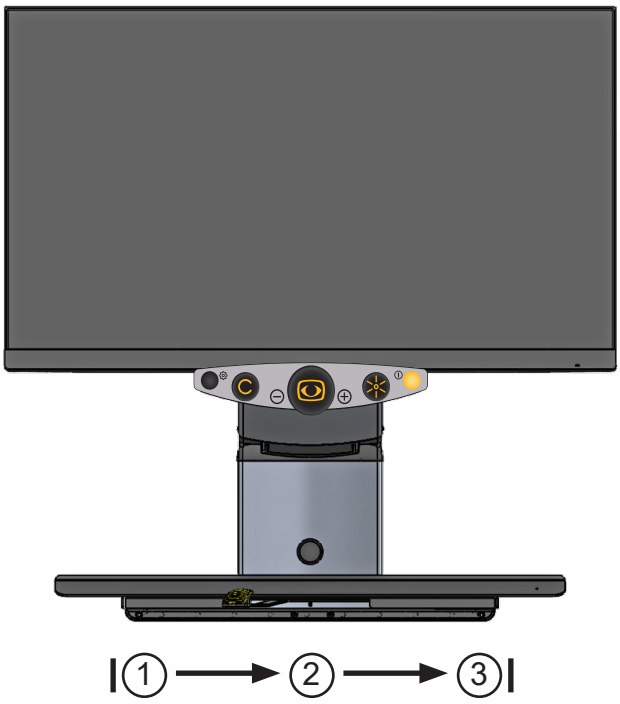

1. In the left lever position, the cross table is freely movable in the x- and y-directions.
2. In the middle position, the x-axis is fixed, while the y-axis remains movable.
3. In the right lever position, both axes (x and y) are fixed.

Description of the control elements

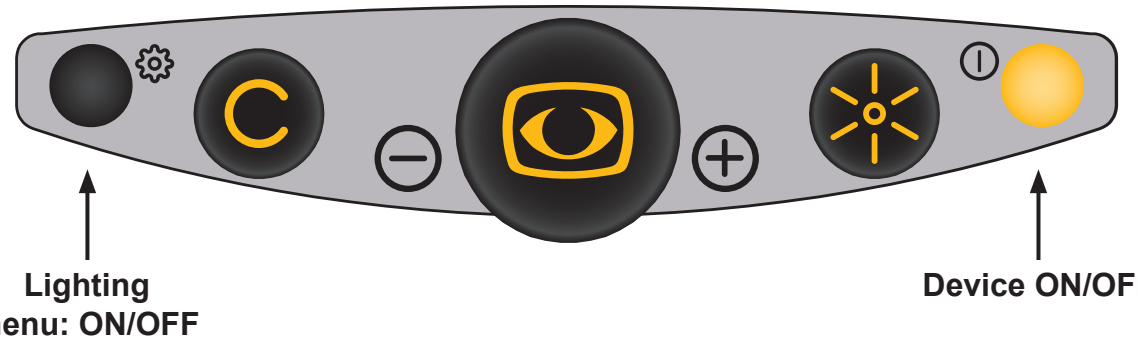

Switching the device ON/OFF

The yellow button switches the device ON or OFF:

1. **Press briefly: Switches the device ON**
2. **Press and hold the button for approximately 2 seconds: Switches the device OFF**

Lighting

You can adjust the light intensity in three levels using the black “Lighting ON/OFF” button:

ON ▶ 50 % ▶ OFF

The last brightness setting is retained when the device is turned OFF.

If lighting conditions change, for example due to sunlight, it may be helpful to dim or turn OFF the device’s lighting.

Menu ON/OFF

Press and hold the black button for about 3 seconds until the internal menu appears on the screen. To exit the menu, press and hold the black button again for about 3 seconds.

Monitor control panel

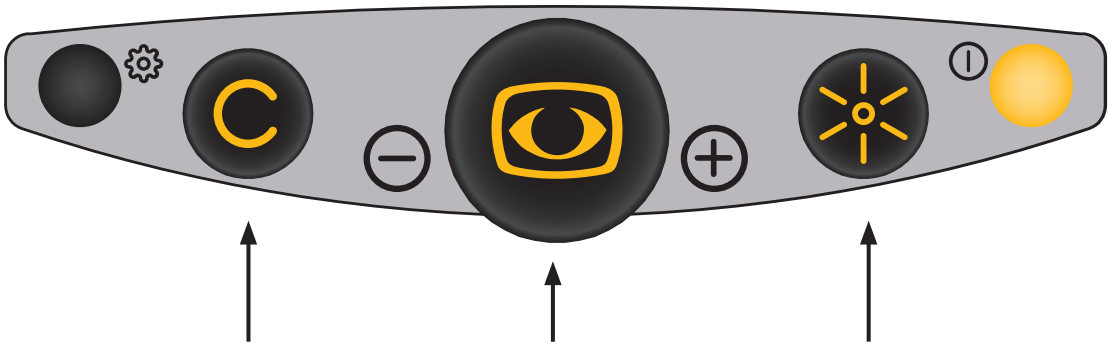

Colour mode selection

Zoom +/-
Auto-focus ON/OFF
Overview Mode

Brightness/Contrast
Line marker/Shadowing

Left button:

Colour mode selection

This button can be turned endlessly to the right or to the left and will always change the positions of the color mode (1-6):



Position 1: full colour display
Position 2: black font, white background
Position 3: white font, black background
Position 4: green font, black background
Position 5: yellow font, black background
Position 6: yellow font, blue background

Note: Individual colour combinations can be defined via the internal menu.
You also have the possibility to reduce the colour combinations. If you, for example, reduce the 6 combinations to four, these four combinations are evenly divided on the positions of the button.

Switching between true colours and artificial colours

Pressing the rotary knob allows you to switch directly between the selected colour combination and true colours.

Central button:

Zoom +/-



By turning the central button endlessly (either to the left or to the right) text and pictures can be zoomed in and out continuously.

The last magnification set will be memorized and displayed when turning the VEO UNO ON again.

Overview mode

When you are reading at a higher magnification level and want to find out which part of the page you have reached, this function helps you to get the overview.

Press the central (“zoom”) button at a higher magnification level for approximately 2 seconds until the overview mode is activated. The image on the screen will minimise and you will see an overview of the whole document/image/printed text. A faded cross will appear and indicate the area that is currently being magnified. Once the central button is released it will return back to the reading mode and selected magnification level.

Right button:

Automatic colour saturation

Brightness and colour saturation are automatically adjusted, colours are displayed true to original. The colour saturation range can also be adjusted in the menu.

Brightness/Contrast



Turning the right control button adjusts brightness and contrast. That means that both, bright and dark image zones, change equally. (to be turned endlessly either to the left or to the right).

turn to the left: lowest contrast, lowest brightness

turn to the right: maximum contrast, maximum brightness

Line marker and shadowing



By pressing the right control button the horizontal function of line marker/shadowing will be activated.

By pressing the operating key again, the vertical function of the line marker/shadowing will be activated.

The operating key can be rotated endlessly from left to right and switches seamlessly between line marker/shadowing.

Pressing the operating key again will deactivate the line marker/ shadowing function.

Power ON/OFF

Operation with power supply and cables

For mains operation, ensure that the included power adapter is connected to the mains power supply and to the USB-C port of the screen reading system.

Power ON

Briefly press the yellow button on the control panel to turn the device ON.
When the VEO UNO and the base plate is illuminated, you can put a page or an object onto the table. All the possible settings – for example zoom, colour or brightness- can be adjusted individually.

Power OFF

Press the yellow button on the control panel for approximately 2 seconds to switch OFF the device.

Automatic saving of device settings

All recently used settings will remain active when switching the device ON again.

Replacement of lighting

The electronic magnifier is equipped with a high power LED Illumination.
If replacement of the lamp is required it should only be done by a specialist or by Reinecker Vision GmbH.

Important note to the use of power supply

Please only use the power supply included in the delivery. Use of any other power supply will void the warranty!

Description of the menu settings VEO UNO

Menu selection



Press and hold the black button for approx. 3 seconds until the menu appears on the screen.

Main Menu	
Colour Saturation	+50
Language	English
AF Mode	auto
Min. magnification	standard
Max. magnification	standard
Grid Frequency	50Hz
Monitor Brightness	80%
Reset to Factory Settings	
Advanced Settings	
Exit	

Adjust menu settings



Move up/down the menu
Turn the central zoom button in order to navigate through the menu (to be turned endlessly either to the left or to the right).

Select an item in the menu
Press the central zoom button in order to open the menu selection.

Change menu selection
Turn the central zoom button in order to change menu settings.

Confirm and select the menu selection
Press the central zoom button in order to confirm menu settings.

Exit main menu
Use the control button to navigate to ‘Exit’ and press the control button to exit the menu. Alternatively, press and hold the black button ca. 3 seconds to exit the menu.

Explanation of the menu content

The image shows in detail how the menu is structured.

Main Menu	← Menu level 1
Advanced Settings	← Menu level 2
Colour Combination Setup	← Menu level 3
User colours	← Menu level 4
Function	**adjustment range** | explication

Menu settings

Main Menu	
Colour saturation	**adjustment range from -50 to +50**
Language	**English** | **German** | **French** | **Swedish** | **Italian** | **Norwegian** | **Japanese**
AF Mode	**auto** | **push** (By push button)
Min. magnification	**low**[1] | **standard**
Max. magnification	**low**[1] | **standard** | **high**[1]
Grid Frequency	**50Hz** | **60Hz**
Monitor Brightness	**100%** | **75%** | **50%** | **25%**
Reset to Factory Settings	Confirm to the factory setting restore
Advanced Settings	*(see overview)*

Overview:	**Advanced Settings**
	Colour Combination Setup
	Set Ruler Colour
	Mask Transparency
	OSD Messages (for overview mode)
	Save User Settings
	Recall User Settings
	Change Factory Settings
	Return

[1]**Magnification**	**low**[1]	**standard**	**high**[1]
24"-class incl. XY-table	1.8x	3.1-43x	105x

Main Menu	
Advanced Settings	
Colour Combination Setup	
Colour Combination 1-6	
Mode	**Disabled** | **Full Colour** | **Grayscale** | **False Colour**
Foreground	**Black** | **Red** | **Green** | **Blue** | **Yellow** | **Magenta** | **Cyan** | **White** | **User 1** | **User 2**
Background	**Black** | **Red** | **Green** | **Blue** | **Yellow** | **Magenta** | **Cyan** | **White** | **User 1** | **User 2**
Swap Fore-/ Background	invert foreground and background colours
Return	

Main Menu	
Advanced Settings	
Colour Combination Setup	
User colours	
User colour 1 - Red	**adjustment range from 0 to 31**
User colour 1 - Green	**adjustment range from 0 to 31**
User colour 1 - Blue	**adjustment range from 0 to 31**
User colour 2 - Red	**adjustment range from 0 to 31**
User colour 2 - Green	**adjustment range from 0 to 31**
User colour 2 - Blue	**adjustment range from 0 to 31**
Return	

Main Menu	
Ruler / Mask Settings	
Ruler Colour	
Red	**adjustment range from 0 to 31**
Green	**adjustment range from 0 to 31**
Blue	**adjustment range from 0 to 31**
Return	

Main Menu	
Advanced Settings	
Mask Transparency	**50%** | **25%** | **0%**
OSD Messages (for overview mode)	**ON** | **OFF**
Save User Settings	Confirm selection to restore the user settings
Recall User Settings	Confirm selection to restore the user settings
Change Factory Settings	Access - only by authorized service technicians
Return	

IV. Troubleshooting

Problem	Solution
No image is shown.	Check the mains connection, the cable connection to the monitor and that all relevant systems are switched ON or activated.
Screen is dark.	Check the brightness and contrast settings of the camera.
True colour is not displayed correctly.	Check your reading material, colour mode setting, brightness, colour saturation and camera lighting.

V. Technical details

VEO UNO **24"- class monitor**	LED flat screen monitor 24"- class | approx. 61,5 cm (1920 x 1080 pixel) height adjustable, vertically inclinable	Weight: approx. 10.5 kg incl. xy-table Measurements (WxHxL) expanded: approx. 54 x 56 x 49 cm folded: approx. 54 x 22 x 46 cm
Colour modes	True colours, preset and individually adjustable artificial colour modes	
Auto-focus	Can be switched OFF	

VI. Warranty Information

1. Reinecker Vision GmbH grants a warranty of 24 months (warranty period only valid within the European Union) against defects in manufacture counted from date of invoice ex Reinecker Vision GmbH.
2. All parts that have been replaced when repairing the unit will automatically become property of Reinecker Vision GmbH.
3. Damage caused by improper use or by non-compliance with the operating instructions will result in the invalidation of the warranty.
4. Interventions from persons other than Reinecker Vision GmbH authorised specialists may lead to invalidity of warranty.
5. The liability for defects in material does not include illuminants that serve to illuminate the reading material and other parts subject to wear and tear, such as rechargeable batteries, etc.
6. If a warranty claim is necessary, the system has to be returned to the manufacturer in Alsbach-Hähnlein or to your authorized dealer in the original packaging including all components. The manufacturer does not carry the cost for transport, packaging and insurance. Prior to returning the system, a RMA number issued by Reinecker Vision is required. Please have the exact serial number of your system before hand.

Phone number: +49 6257 93110

View our General Terms and Conditions.

Type:	**VEOUNO241, VEOUNO241LV**
Serial number:	
Manufacturer:	Reinecker Vision GmbH
Final examination:	
Power supply:	100 VAC – 240 VAC 50-60 Hz
With plug-in power supply:	USB-C PD - 20V DC/3.25A
Power consumption:	max. 35 watt

Manufacturer

Reinecker Vision GmbH
International Contact

sales department, customer relations:
Sandwiesenstraße 19
DE-64665 Alsbach-Hähnlein

customer service:
Erlenweg 3
DE-64665 Alsbach-Hähnlein

Tel.: +49 6257 9311-0
Fax: +49 6257 9311-8230

Email: international@reineckervision.de
www.reineckervision.com

SRN: DE-MF-000025998

In case service is necessary, please contact your authorized distributor.

Hersteller

Reinecker Vision GmbH
Zentrale

Vertrieb, Kundenberatung:
Sandwiesenstraße 19
64665 Alsbach-Hähnlein

Kundendienst:
Erlenweg 3
64665 Alsbach-Hähnlein

Tel.: 06257 93 11-0
Fax: 06257 93 11-8008

Email: info@reineckervision.de
www.reineckervision.de

SRN: DE-MF-000025998

Bitte wenden Sie sich bei Fragen oder einem Servicefall direkt an unser Hauptwerk in Alsbach-Hähnlein.

Bei im Ausland erworbenen Produkten kontaktieren Sie im Servicefall bitte Ihren dort ansässigen Händler.

Version 2.2, Stand 10/26, Art.-Nr. 00020593
Subject to change.

REINECKER