User manual

VEO EDU 24"

EN



Please read this user manual carefully prior to installation, use and maintenance for your own safety and in order to avoid damages on your system.

REINECKER

Reinecker Vision GmbH
Sandwiesenstraße 19 · 64665 Alsbach-Hähnlein
Email: info@reineckervision.de · www.reineckervision.de
SRN: DE-MF-000025998

EU-Konformitätserklärung
EU-Declaration of conformity

Wir erklären in alleiniger Verantwortung für alle unsere Systeme, dass diese mit den folgenden Richtlinien übereinstimmen.

Das opto-elektronische Lesesystem ist ein Medizinprodukt zum Vergrößern von Text- und Bildvorlagen. Stark sehbehinderte Menschen kompensieren damit ihre Sehbeeinträchtigung.

We declare under our sole responsibility that the systems, which have been brought into the market by us, meet the requirements of the following regulations.

This opto-electronic reading system is a medical device for magnifying text and pictures. By using this device, humans compensate for their visual impairment.

VEO EDU 24"

(Art.-Nr.: VEVED243)

Basis UDI-DI: 42556338BLSVY

Richtlinie 2017/745/EU
Medical Device Regulation (MDR)
Risikoklasse I nach Anhang VIII Regel 13
CE Konformität nach Anhang IX und
RoHS II (Richtlinie 2011/65/EU)

Regulation (EU) 2017/745
concerning medical devices risk class I
according to Annex VIII standard 13
CE conformity of Annex IX and
RoHS II Regulation (EU) 2011/65

Die CE– Kennzeichnung auf dem Gerät dokumentiert diese Übereinstimmung.
The CE mark on the system points out this accordance.

Alsbach-Hähnlein,

01.12.2023
Ort und Datum der Ausstellung
Place and date of issue

M. Reinecker Geschäftsführer
M. Reinecker General Manager

Name und Unterschrift des Befugten
Name and signature of the authorized person

Contents

I. General information 8
Notes on the electromagnetic compatibility (EMC) 8
Storage of the user manual 8
Product description 9
Medical device 9
Purpose 9
Evolution and lifetime of products 9
Safety advice 10
Combination with other products 10
Precautions by alteration of the performance of the system 10
Reinstatement and installation 10
Cleaning of the system 10
Special advice for transport and storage 11
Disposal of the unit according to (EU) 2012/19 11
Power supply 11
Safety instructions 12
Insert/replace batteries in remote control 13
Disposal of batteries 13

II. Instructions for the reading system VEO EDU 14
Delivery content 14
Installation of the system 14
Manual adjustment of the distance camera 15
Adjustment of height 15
Changing the turning angle of the distance camera 15
Connection of unit 16
Connection for a joystick control - distance camera 16
Connection to image sources 16
USB 3.0 output 17

Description of the 15-buttons remote control unit 17
Left buttons 18
Navigation of distance camera 18
Saving position of distance camera 18
Select saved position 18
Function „Latest position“ 19
Blackboard scanning mode 19
Menu selection ON/OFF 19
Central buttons 20
Zoom +/- 20
Colour mode selection 20
Auto-Exposure ON/OFF 20
Autofocus ON/OFF 20
Menu selection ON/OFF 21
Key allocation for the central operating unit 21
Allocation of function keys (1. level) 21
Double allocation of function keys (2. level) 21
Right buttons 21
Split Screen ON/OFF 21
Move splitted screens 21
Horizontal and vertical split screen 22
Choosing picture source 22
Choosing the „Pinned half“ 22
Switching on the device by the user 22
Motion control menu distance camera 23
Changing menu items 23
Exit the main menu 23
From the submenus back to the main menu 23
Explanation of the menu content 23

Function control menu distance camera 25
Changing menu items 25
Exit the main menu 25
From the submenus back to the main menu 25
Description of the 3-buttons remote control 31
Frontal view 31
Left button 31
Color mode selection 31
Central („zoom“) button: 32
Power ON/OFF 32
Zoom + / - 32
Auto focus 32
Right button 32
Contrast / Brightness 32
Line marker / shadowing 33
Turning the unit ON manually 33
Lighting ON/dim/OFF 33
Overview mode 34
Automatic switch-OFF function 34
Menu selection 35
Change the menu settings 35
Exit menu 35
Explanation of the menu content 36
Menu settings 36
Warranty Information 40
Notes 41

I. General information

Important notes on the operation of the reading system VEO EDU. Please read them carefully prior to the operation of the reading system!

Notes on the electromagnetic compatibility (EMC)

This reading system is suited for use in all set-ups including the domicile that are connected directly to a public power supply for buildings with residential purposes.

This reading system is designed for the use in the indicated electromagnetic environment. The user should ensure the use in the indicated environment.

This reading system operates on HF-Energy exclusively for its own function. Therefore the emitted interference of high frequency disturbances is very low and the interference with other appliances operated close-by is improbable. When operating the reading system simultaneously with other systems, however, the possibility of disturbances of the system or other systems should not be neglected.

For this reason it should be ensured that the system is not placed directly beside or on top of another system. If the set-up of this system in the proximity of medical, measuring devices cannot be avoided, the operator of these devices has to be informed that it is necessary to observe the performance of the system to control the conventional use of the system in the chosen set-up.

Electronic devices are sensitive towards electric discharge and towards high frequency electromagnetic fields.

Attention: In order to avoid high frequency disturbances the operator should respect a minimum distance of one meter to portable and mobile HF-telecommunication devices.

Please also see chapter: Safety advice.

Storage of the user manual

The user manual is an essential part of your reading system. Please keep the booklet in a safe place for future reference.

Product description

VEO EDU is an opto-electronic reading system, which magnifies text and pictures. It may be used permanently for private and professional appliance. The text or pictures are being captured by the camera and then displayed on the monitor.

- FullHD+ distance camera with telescopic stand, separately controllable, memory function for four camera positions
- Displays up to four different image sources (2 image sources simultaneously), for example simultaneously displaying the distance camera and VEO camera image on the VEO monitor.

Medical device

This reading system is classified as a medical device, class I according to (EU) 2017/745, Annexe VIII, standard 13. For the distribution to countries outside the EU the respective country-specific guidelines have to be regarded.

Purpose

This opto-electronic reading system is a medical device to assist with the reading and magnifying of printed text and pictures. Visually impaired people can compensate for their loss of visual acuity by using this device.

Evolution and lifetime of products

The Medical Device Directive regulates by law that manufacturers of medical devices shall determine a period of safety operation of a product. We fulfill hereby legal requirements and determine - for formal reasons - a period of three years after date of first purchase.

Note:
The mentioned life span does not reflect the complete life span of the VEO EDU. It is rather an indication on when the product might be obsolete and substitution might be recommended due to new product developments.

Safety advice

VEO EDU has to be installed in closed and dry rooms only.
Do not plug VEO EDU into an electrical circuit that is also being used for any life sustaining or support systems.

The device may not be used in the patients environment.

This device should not be operated in explosion-endangered environments. This opto-electronic device should only be installed in conjunction with modern electrical circuitry.

Combination with other products

Warning: This reading system must not be located directly beside, next or on top of another medical device. If the device is used near another electrical device, monitor the other device to ensure that it is working properly. In case of doubt please contact Reinecker Vision GmbH or any licensed distribution partner.

Precautions by alteration of the performance of the system

Stop using the reading device if technical features or performances should change. Switch the device OFF and disconnect the power supply from the mains wall socket.

Refer directly to your authorized dealer or to Reinecker Vision GmbH Service Center.

Reinstatement and installation

This device may be technically maintained and reconditioned by Reinecker Vision GmbH only or by an authorized technician. Reinstatement may only take place after the system has been cleaned and safety checked.

Cleaning of the system

- This reading system has to be disconnected from the power supply before cleaning.
- Clean the system with a slightly damp cloth and a mild household detergent.
- Interior of device must NOT come in contact with liquids.

Special advice for transport and storage

For reasons of safety, the unit must only be transported and stored in the original packing. The unit must be stored in dry and closed rooms in the original packing.

The following conditions for transport and storage have to be respected:

- Air pressure 700 - 1000 hPa
- Temperature range +5° to + 50°
- Relative air humidity 30% to 80%

Disposal of the unit according to (EU) 2012/19

VEO EDU contains of electronic components. To avoid damage to the environment, the country-specific rules have to be respected.

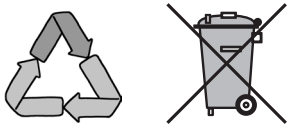

Power supply

Only use the original power supply which is included in the delivery by Reinecker Vision GmbH.

Caution: The use of any other equipment might lead to an increased electromagnetic emission and to a product damage.

Safety instructions

Please respect the following safety instructions:

1. Do not plug the AC adapter into a faulty electrical outlet. Doing so may cause electrical shock or fire.
2. Do not touch the AC adapter with wet hands.
3. Only use the original power supply which is included in the delivery by Reinecker Vision GmbH. The use of any other equipment might lead to a product damage.
4. Do not expose the system to direct sunlight or to very hot or cold environment, as this would harm the picture quality.
5. Do not use this device below +5°C or above +40°C.
6. No liquids must reach the interior of the system. Only use the device in a dry environment.
7. The device may not be used next to medical devices (patients environment).
8. Do not lean on the system and do not put heavy objects on it as the system could be damaged.
9. Do not try to repair or to dismantle the system by your own. This would automatically void the warranty. If you need any technical assistance please get in contact with the local distributor or with Reinecker Vision GmbH.
10. Always switch OFF the system and disconnect it from the power supply before cleaning it. Only use a soft and slightly damped cloth. Only use a mild household detergent. Do not use alcohol containing or strong detergents.

Insert/replace batteries in remote control

The remote control operates on 2 x AA-batteries (1,5V).

- Detach the cover on the flipside of the remote control.
- Put in the batteries and make sure that polarity is correctly matched.
- Replace the cover onto the remote control using marginal pressure.

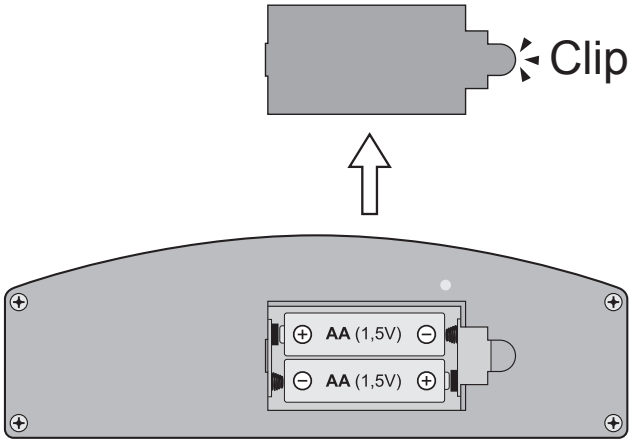

Disposal of batteries

Note: Dispose of batteries according to the national guidelines!

II. Instructions for the reading system VEO EDU

Delivery content

- Reading system VEO EDU
- LED flat srceen 24"- class monitor (60 cm)
- Remote control 15-buttons
- Power adapter 12V / 8A
- User manual
- Information sheet for repair cases

Installation of the system

Please take the device out of the packaging and put it on a stable surface with sufficient space. The height-adjustable tables of Reinecker Vision GmbH are proper for this purpose.

Note: When taking VEO EDU out of the packaging, please don´t pull out the device at the camera or the reading table.



Manual adjustment of the distance camera

Adjustment of height

Please push the lock button up and pull the adjustable distance pole to the favoured height (about 55 - 76 cm).



Changing the turning angle of the distance camera

The basic position of the X-axis can be changed by manually turning the basic pole (approx. 60°).

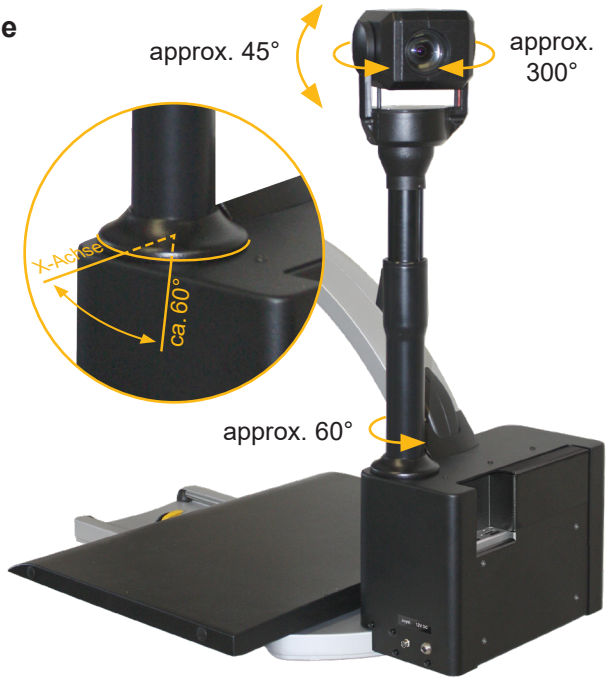

Connection of unit

Please connect the enclosed power supply unit to an external power supply and connect the DC plug to the DC jack 12V on the right side of the VEO EDU.

Note: The delivered power cable is to be used exclusively in connection with the VEO EDU.

Once the device is plugged in, it is ready to use.

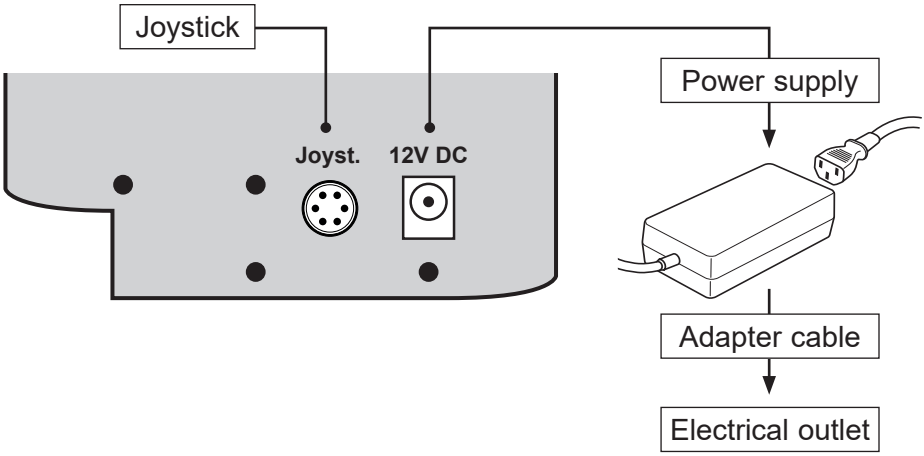

Connection for a joystick control - distance camera

A joystick control is available as an option and is used to operate the distance camera and execute controls.

Connection to image sources

Digital image signals can be fed in via two HDMI inputs. Connect the input and output sources to the desired image output devices, e. g. Laptop or PC in combination with a reading system.

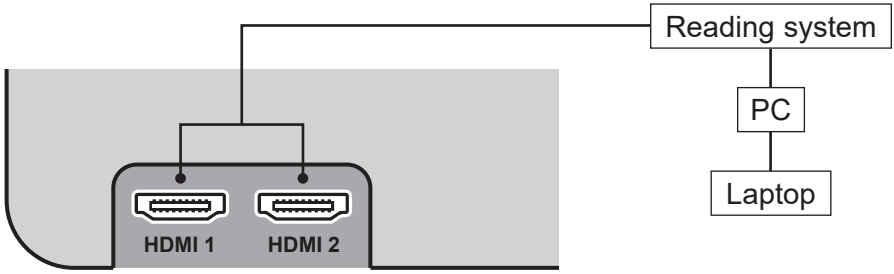

VEO EDU automatically detects if external sources are connected. If an external source is displayed and this source is removed, the VEO EDU switches to the document camera. This does not work when split mode is enabled. If split mode is activated and a source is connected or disconnected, the VEO EDU will only recognize this if it has been in full screen mode for at least 5 seconds.

USB 3.0 output

The image is output via USB 3.0, which is also displayed on the monitor, 1920 x 1080 with 60 fps and 30 fps (frame rate can be selected on the connected PC).

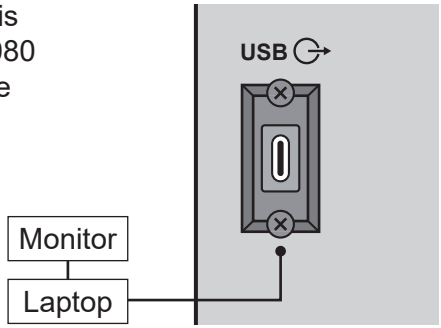

Description of the 15-buttons remote control unit

Frontal view:

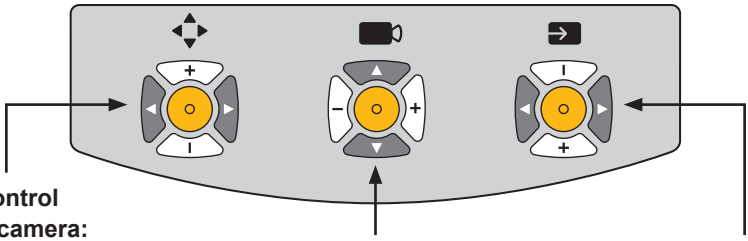

Motion control distance camera:

Up/down/right/left, camera positions save/retrieve, board scan, menu selection ON/OFF

Function control distance camera:

Zoom +/-, colour mode selection, brightness, menu selection ON/OFF

Splitting functions:

Split screen; selection of image source

Left buttons

Navigation of distance camera

The distance camera can be moved to the desired position by pressing the plus/minus buttons and the arrow keys. While navigating a crosshairs appears in the centre of the screen. The crosshairs show on which point the camera focuses. (The crosshairs can be switched off in the menu.)

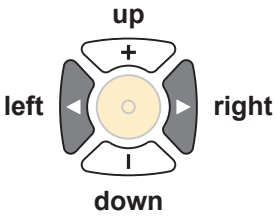

Saving position of distance camera

You can save up to 4 different positions for the distance camera.

Option 1: First press the yellow control key briefly to activate the saving process. Then press the desired position key (plus/minus button or arrow keys) and hold it until the selected saving position appears briefly on the screen.

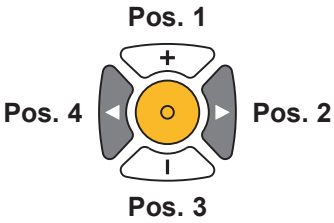

Option 2: Press the yellow control key in regular intervals and hold it at the desired saving position (1-4) until the selected location appears briefly on the screen.

Select saved position

Option 1: Press the yellow control key in short intervals and release it at the desired position (1-4). The distance camera then moves to the saved camera position.

Option 2: First press the yellow control button briefly and then press the desired position key (plus/minus button or arrow keys). The distance camera then moves to the saved camera position.

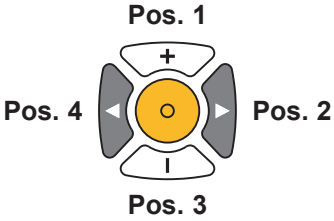

Function „Latest position“

Press the yellow control key briefly to switch between the two saved positions last selected. A message of the selected position appears briefly on the screen.



Blackboard scanning mode

The blackboard scanning mode has an automatic function for changing the direction of the distance camera and is therefore ideal for reading objects at a distance (eg. black board). To start the blackboard scanning mode, the following orientation parameters must be set.

For example on a school blackboard:

- Blackboard view top left: Save at position button 3.
- Blackboard view at the bottom right: Save at position button 4.

The blackboard scanning mode is started by simultaneously pressing the two arrow keys. By pressing the plus or minus button, the row height can be adjusted manually during the course.

row height (–)



row height (+)

The yellow control button works as a pause / start function while in the blackboard scanning mode.

Note: By simultaneously pressing the two arrow keys in the blackboard scanning mode it is prematurely canceled. When reaching position 4, the blackboard scanning mode stopps.

Menu selection ON/OFF

Press the plus and minus button simultaneously to turn ON or OFF the menu selection for motion control.

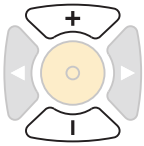

Central buttons

Note: The key allocation described below is the factory setting. This can be individually adjusted via the menu.

Zoom +/-

The magnification can be continously changed from minimum to maximum by pressing the plus or minus key.

Zoom - 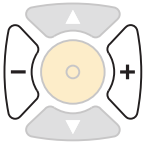 **Zoom +**

Colour mode selection

By pressing the yellow controll keys, you can choose the following screen colours:



Position 1. full colour display
Position 2. black font, white background
Position 3. white font, black background
Position 4. green font, black background
Position 5. yellow font, black background
Position 6. yellow font, blue background

The chosen colour mode appears temporarily on the lower side of the screen (when activated).

Auto-Exposure ON/OFF

In the distance mode the automatic iris control (auto-exposure) can be switched on and off by pressing the upper arrow key.



Autofocus ON/OFF

By pressing the down arrow key, autofocus is switched on or off alternately. The camera focuses automatically within its imaging scale when the autofocus function is on.



Menu selection ON/OFF

Press and hold both arrow keys simultaneously to toggle between on and off.



Key allocation for the central operating unit

The following key allocations are assignable via the menu (see menu overview on page 27):

Allocation of function keys (1. level)

Deactivate, Zoom tele, Zoom wide,
Brightness +, Brightness -, False Color,
Overview mode, Autofocus,
Focus close, Focus remote,
Auto Exposure

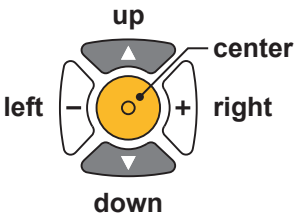

Double allocation of function keys (2. level)

Deactivate, Zoom tele, Zoom wide,
Brightness +, Brightness -, False Color,
Overview mode, Autofocus,
Focus close, Focus remote,
Auto Exposure

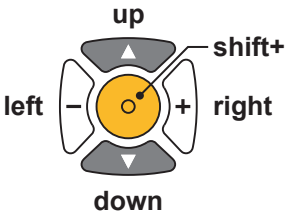

Right buttons

Split Screen ON/OFF

By pressing the left arrow key, the split screen is turned on and off.



Move splitted screens

By pressing the plus or minus key the image pitch can be moved (up/down).



Horizontal and vertical split screen

You can switch between horizontal and vertical split screen by pressing the yellow control button.



Choosing picture source

By pressing the right arrow key, up to four video sources can be selected. The system automatically detects the number of active image sources.



Choosing the „Pinned half“

Before you want to set the input signal of the „Fixed Half“, turn off the image splitting. Now use the right arrow button to select one of four possible image sources that should be displayed in the “Fixed Half” after the image split is switched on again. If split screen is active, the image source to be displayed in the non-fixed half can be selected from the remaining image sources using the right arrow button.

Image sources: HDMI 1 and HDMI 2 (if connected) Internal camera and distance camera

Switching on the device by the user

Only when the system is properly connected to the power supply, it can be accessed by pressing the „zoom +/-“ on the 3-button operation of the VEO basic system. When the unit powers up lights will initially illuminate and after short time automatically return to the last used brightness level.

Note: If the xy table is not automatically lit up please check that the mains power cable has been securely connected to the power brick. If it is correctly connected then manually check the lighting settings on the remote control as lighting may have been manually deactivated.

Motion control menu distance camera

Please press plus and minus button simultaneously to turn on the menu.

Extended Menu	
Image Settings	
Color Settings	
Preset Settings	
OSD-Messages	ON
Language	English
User Menu	
Exit	

Changing menu items

Select menu item with the plus or minus button and change or select the setting with the right arrow key.

Exit the main menu

Navigate to “Exit” with the plus or minus key and exit the main menu by pressing the right arrow key. Or for direct switch off, press the plus and minus buttons simultaneously.

From the submenus back to the main menu

Select „Back“ by navigating with the plus or minus key and exit the menu by pressing the right arrow button.

Explanation of the menu content

The table below shows the structure of the menu.

Main Menu	← Menu level 1
Advanced Settings	← Menu level 2
Special Settings	← Menu level 3
Customize Buttons	← Menu level 4
Function	**adjustment range** | explication

Extended Menu	
Image Settings	
Image Rotation	**0° | +90° | 180° | -90°**
Detail Enhancement	**adjustment range from 0 to 24**
Max. Dig. Zoom False	**OFF | adjustment range from 1,5x to 15,0x**
Max. Dig. Zoom Real RHC	
AF	**Continuous | Semi-Automatic | Semi-Automatic + Zoom | Continuous/Zoom**
Return	

Extended Menu	
Color Settings	
White Balance Mode	**Auto | One-Push**
Gain Red	**Auto**
Gain Blue	**Auto**
Perform Semi-Automatic WB	**Confirm choice to run the semi-automatic white balance**
Color Saturation	**adjustment range from -64 to +64**
Background Color	**n / a** | not active
Foreground Color	**n / a** | not active
Mode	**n / a** | not active
Return	

Extended Menu	
Preset Settings	
Function 1	**Zoom Tele | Zoom Wide | Autofocus | Focus Near | Fokus Far | Mask ON/OFF**
Function 2	**Zoom Tele | Zoom Wide | Autofocus | Focus Near | Fokus Far | Mask ON/OFF**
Function 3	**Zoom Tele | Zoom Wide | Autofocus | Focus Near | Fokus Far | Mask ON/OFF**
Restore Default Settings	**Confirm choice to restore the default**
Use Alternative Settings	**Confirm choice to restore the alternative settings**
Return	

Extended Menu	
OSD-Messages	**ON | OFF**
Language	**English | German | French | Swedish | Norwegian**
User Menu	**Confirm choice to enter the user menu**
Exit	

Function control menu distance camera

Press the arrow buttons simultaneously to bring on the menu.

Main Menu	
Brightness	**+50**
Contrast	**+50**
Color Saturation	**- 30**
Ruler/Mask	**OFF**
Ruler/Mask Settings	
AF Mode	**Constantly**
Reset to Factory Settings	
Recall User Settings	
Advanced Settings	
Exit	

Changing menu items

Select menu item with the arrow keys and change or select the setting with the Plus button.

Exit the main menu

Navigate to “Exit” with the arrow keys and exit the main menu by pressing the plus button. Or for direct switch off, press the plus and minus buttons simultaneously.

From the submenus back to the main menu

Navigate to „Back“ with the arrow keys and exit the menu by pressing the plus button.

Main Menu	
Brightness	**adjustment range from -50 to +50**
Contrast	**adjustment range from -50 to +50**
Color Saturation	**adjustment range from -50 to +50**
Ruler/Mask	**OFF** | deactivate line marker and shadowing **Ruler** | activate line marker **Mask** | activate shadowing

Main Menu	
Ruler/Mask Settings	
Ruler/Mask	**OFF** | deactivate line marker and shadowing **Ruler** | activate line marker **Mask** | activate shadowing
Ruler Position	**0 to 100** | adjust line marker position
Mask Position	**0 to 100** | adjust shadowing
Ruler Mode	**Horizontal** | anlign line marker horizontally **Vertical** | anlign line marker vertically

Main Menu	
Ruler/Mask Settings	
Mask Mode	**Left/Right** | Shadowing left/right; shadowing up to 50% **Top/Bottom** | Shadowing top/bottom; shadowing up to 50% **Left/Right FS** | Shadowing left/right; shadowing up to 90% **Top/Bottom FS** | Shadowing top/bottom; shadowing up to 90% **Full-Screen** | Shadowing covers whole screen
Mask Transparency	**50%** | **25%** | **0%**

Main Menu	
Ruler/Mask Settings	
Ruler Color	
Red	**adjustment range from 0 to 31**
Green	**adjustment range from 0 to 31**
Blue	**adjustment range from 0 to 31**

Main Menu	
AF Mode	**Continuous** | **Semi-Automatic** | **Semi-Automatic + Zoom** | **Continuous/Zoom**
Reset to Factory Settings	Return to factory settings
Recall User Settings	Return to customer selected settings
Advanced Settings	*(see overview)*

Overview:	Advanced Settings	
	Color Combination Setup	
	Anti Reflection Mode	OFF
	Monitor Brightness	100
	Language	English
	Perform White Balance	
	White Balance Mode	Auto
	Sharpness Settings	
	OSD Messages	ON
	Special Settings	
	Return	

Main Menu	
Advanced Settings	
Color Combination Setup	
Color Combination 1-6	
Mode	Disabled | Full Color | Grayscale | False Color
Foreground	Black | Red | Green | Blue | Yellow | Magenta | Cyan | White | User 1 | User 2
Background	Black | Red | Green | Blue | Yellow | Magenta | Cyan | White | User 1 | User 2
Swap Fore-/ Background	invert foreground and background colours

Main Menu	
Advanced Settings	
Color Combination Setup	
User colors	
User color 1 - Red	adjustment range from 0 to 31
User color 1 - Green	adjustment range from 0 to 31
User color 1 - Blue	adjustment range from 0 to 31
User color 2 - Red	adjustment range from 0 to 31
User color 2 - Green	adjustment range from 0 to 31
User color 2 - Blue	adjustment range from 0 to 31

Main Menu	
Advanced Settings	
Anti Reflection Mode	**OFF** | **ON** | **Auto (0-9)** | adjust default value
Monitor Brightness	**adjustment range from 37 to 100**
Language	**English** | **German** | **French** | **Swedish** | **Norwegian**
Perform White Balance	execute white balance
White Balance Mode	**Auto** | **One-Push**

Main Menu	
Advanced Settings	
Sharpness Settings	
Real Color Sharpness	**adjustment range from 0 to 24**
False Color Sharpness	**adjustment range from 0 to 24**

Main Menu	
Advanced Settings	
OSD Messages	**ON** | **OFF**
Special Settings	*(see overview)*

Overview:

Special Settings	
Zoom Extension	**ON**
Max. Digital Zoom	**3.5x**
Customize Buttons	
Store User Settings	
Recall User Settings	
Reset to Factory Settings	
Expert Settings	
Monitor size	**24"**
Room Camera Settings	
Return	

Main Menu	
Advanced Settings	
Special Settings	
Zoom Extension	**ON** | **OFF**
Max. Digital Zoom	**OFF** | adjustment range from 1,5x to 15x

Main Menu	
Advanced Settings	
Special Settings	
Customize Buttons	
Up	**Disabled** | **Zoom Tele** | **Zoom Wide** | **Brightness +** | **Brightness -** | **False Color** | **Overview** | **Autofocus** | **Focus Near** | **Focus Far** | **Auto Exposure**
Down	
Left	
Right	
Center* (Go to 2. level)	**Disabled** | **Zoom Tele** | **Zoom Wide** | **Brightness +** | **Brightness -** | **False Color** | **2nd Layer*** | **Overview** | **Autofocus** | **Focus Near** | **Focus Far** | **Auto Exposure**
2nd+Up	**Disabled** | **Zoom Tele** | **Zoom Wide** | **Brightness +** | **Brightness -** | **False Color** | **Overview** | **Autofocus** | **Focus Near** | **Focus Far** | **Auto Exposure**
2nd+Down	
2nd+Left	
2nd+Right	
Return	

Main Menu	
Advanced Settings	
Special Settings	
Store User Settings	Confirm selection to the user setting to save
Recall User Settings	Confirm selection to the user setting restore
Reset to Factory Settings	Confirm to the factory setting restore
Expert Settings	Access - only by authorized service
Monitor size	**Auto** | **24"**

Main Menu	
Advanced Settings	
Special Settings	
Room Camera Settings	
Crosshair	ON | OFF
Speed Left	adjustment range from 1 to 100
Speed Right	adjustment range from 1 to 100
Speed Up/Down	adjustment range from 1 to 100
Zoom Dependence	adjustment range from 0 to 150
Speed Blackboard Scan	adjustment range from 1 to 99
Line Height Blackboard Scan	adjustment range from 1 to 99
Reinitialize Head	Confirm choice to re-initialize the distance camera
Return	

Description of the 3-buttons remote control

Frontal view:

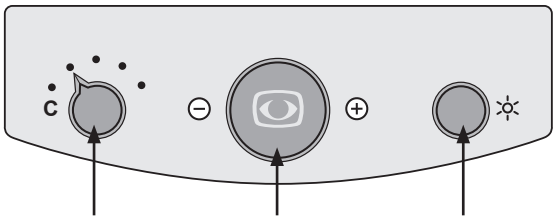

Left button:

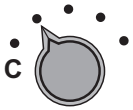

- **Color mode selection**

  By turning the color mode selection-button from the left to the right the following color modes can be selected:

  Position 1. full color display
  Position 2. black font, white background
  Position 3. white font, black background
  Position 4. green font, black background
  Position 5. yellow font, black background
  Position 6. yellow font, blue background

The chosen color mode appears temporarily on the lower side of the screen (when activated).

Note: The above listed color modes represent the factory settings. Using the menu these color modes can be adjusted individually.

Central („zoom“) button:



- **Power ON/OFF**

  By briefly pressing the “Zoom +/-” button, the video magnifier turns ON.

  By pressing and holding the „Zoom +/-“ button for approx. 4 sec., the video magnifier can be turned OFF manually.

- **Zoom + / -**

  By turning the button to the left and to the right the magnification will continuously change from minimum to maximum.

- **Auto focus**

  By quickly pressing and releasing the central (“zoom”) button you can activate/deactivate the automatic focus.

  By having the auto focus activated the camera adjusts the picture sharpness automatically.

Right button:



- **Contrast / Brightness**

  This button is equipped with a pull-out function. With the button in the pushed-in position, the combined adjustment of contrast and brightness is activated. Low contrast, low brightness (turned left position), high contrast, high brightness (turned right position).

- **Line marker / shadowing**



By pulling out the control button will activate the line marking and shadowing functions.

Turn this button to choose the area on the screen to be marked by the line marker or to be covered by shadowing.

To deactivate the line marker/shadowing function, push the button back in again.

Turning the unit ON manually

When the VEO is connected to the power outlet correctly it can be turned on by pushing the central („Zoom + / -“) button.

When the unit powers up lights will initially illuminate and after short time automatically return to the last used brightness level.

Note: If the xy-table is not automatically lit up please check that the mains power cable has been securely connected to the power brick. If it is correctly connected then manually check the lighting settings on the remote control as lighting may have been manually deactivated (see illustration below).

Bottom-up view:

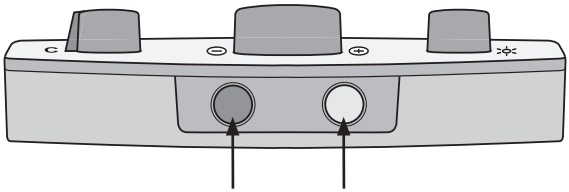

Menu selection ON/OFF, Time adjustment for auto turn OFF

Illumination ON/dim/OFF mode, Time adjustment for auto turn OFF, Overview mode

Lighting ON/dim/OFF

By pushing the yellow button on the bottom side of the remote control the lighting can be

- turned ON
- dimmed
- turned OFF

When turning OFF the VEO the selected level of illumination will be saved.

Overview mode

When you are working at a higher magnification level and want to find out which part of the page you have reached this function helps you to get the overview.

In order to get an overview when reading at a higher magnification level, push and hold the yellow button for approx. 3 sec. The picture will be zoomed out.

A cross hair will appear and indicates the area that is currently being magnified. Once the central button is released it will return back to the reading mode and selected magnification level.

Automatic switch-OFF function

VEO is equipped with an automatic switch-OFF function.

The VEO will automatically switch itself OFF if the remote control of the unit has been inactive for a pre-selected period of time. The automatic turn OFF function can be deactivated or set to one of three possible time frame settings.
By pushing both the black and the yellow button on the bottom side of the remote control simultaneously it will activate the function to change the automatic switch OFF time frame – this can be set to 60 min / 30 min / 15 min / auto OFF (needs to be turned OFF manually).
Release the buttons when the choosen time setting appears. The time setting will then be selected and stored.

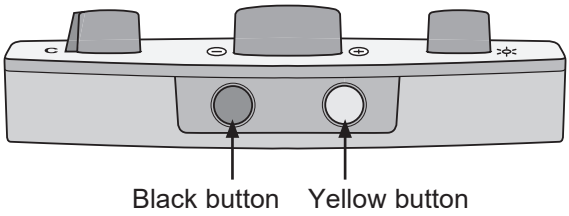

Time setting options:

- automatic turn OFF deactivated
- automatic turn OFF after 15 min.
- automatic turn OFF after 30 min.
- automatic turn OFF after 60 min.

Note:
Once turned OFF the energy consumption of the VEO is less than 0,5 watt.

Menu selection

Keep the black button (underneath the remote control) pressed for approximately 3 seconds until the main menu appears on the screen.

Main Menu	
Brightness	+50
Contrast	+50
Color Saturation	- 30
Ruler / Mask	OFF
Ruler / Mask Settings	
AF Mode*	Continuous/Zoom
Reset to Factory Settings	
Recall User Settings	
Advanced Settings	
Exit	

Change the menu settings

Turn the Zoom +/- button from left to right in order to navigate through the menu. Confirm your selection by pressing the zoom +/- button.

Exit menu

Either turn the Zoom +/- button until you reach the menu selection „exit“ and confirm it by pressing the Zoom +/- button. Or press the black button underneath the remote control until the menu disappears.

Explanation of the menu content

The image shows in detail how the menu is structured.

Main Menu	← Menu level 1
Advanced Settings	← Menu level 2
Special Settings	← Menu level 3
Customize Buttons	← Menu level 4
Function	**adjustment range** | explication

Menu settings

Main Menu	
Brightness	**adjustment range from -50 to +50**
Contrast	**adjustment range from -50 to +50**
Color Saturation	**adjustment range from -50 to +50**
Ruler / Mask	**OFF** | deactivate line marker and shadowing **Ruler** | activate line marker **Mask** | activate shadowing

Main Menu	
Ruler / Mask Settings	
Ruler / Mask	**OFF** | deactivate line marker and shadowing **Ruler** | activate line marker **Mask** | activate shadowing
Ruler Position	**0 to 100** | adjust line marker position
Mask Position	**0 to 100** | adjust shadowing
Ruler Mode	**Horizontal** | anlign line marker horizontally **Vertical** | anlign line marker vertically
Mask Mode	**Left/Right** | Shadowing left/right; shadowing up to 50% **Top/Bottom** | Shadowing top/bottom; shadowing up to 50% **Left/Right FS** | Shadowing left/right; shadowing up to 90% **Top/Bottom FS** | Shadowing top/bottom; shadowing up to 90% **Full-Screen** | Shadowing covers whole screen
Mask Transparency	**50%** | **25%** | **0%**

Main Menu	
Ruler / Mask Settings	
Ruler Color	
Red	**adjustment range from 0 to 31**
Green	**adjustment range from 0 to 31**
Blue	**adjustment range from 0 to 31**

Main Menu	
AF Mode	**Continuous** | **Semi-Automatic** | **Semi-Autom. +Zoom** | **Continuous / Zoom**
Reset to Factory Settings	Return to factory settings
Recall User Settings	Return to customer selected settings
Advanced Settings	*(see overview)*

Overview:	**Advanced Settings**	
	Color Combination Setup	
	Anti Reflection Mode	**Auto (5)**
	Monitor Brightness	**100**
	Language	**English**
	Perform White Balance	
	White Balance Mode	**Auto**
	Sharpness Settings	
	OSD Messages	**OFF**
	Special Settings	
	Return	

Main Menu	
Advanced Settings	
Color Combination Setup	
Color Combination 1-6	
Mode	**Disabled** | **Full Color** | **Grayscale** | **False Color**
Foreground	**Black** | **Red** | **Green** | **Blue** | **Yellow** | **Magenta** | **Cyan** | **White** | **User 1** | **User 2**
Background	**Black** | **Red** | **Green** | **Blue** | **Yellow** | **Magenta** | **Cyan** | **White** | **User 1** | **User 2**
Swap Fore-/ Background	invert foreground and background colours

Main Menu	
Advanced Settings	
Color Combination Setup	
User colors	
User color 1 - Red	**adjustment range from 0 to 31**
User color 1 - Green	**adjustment range from 0 to 31**
User color 1 - Blue	**adjustment range from 0 to 31**
User color 2 - Red	**adjustment range from 0 to 31**
User color 2 - Green	**adjustment range from 0 to 31**
User color 2 - Blue	**adjustment range from 0 to 31**

Main Menu	
Advanced Settings	
Anti Reflection Mode	**OFF** | **ON** | **Auto (0-9)** | adjust default value
Monitor Brightness	**adjustment range from 37 to 100**
Language	**English** | **German** | **French** | **Swedish** | **Norwegian**
Perform White Balance	execute white balance
White Balance Mode	**Auto** | **One-Push**

Main Menu	
Advanced Settings	
Sharpness Settings	
Real Color Sharpness	**adjustment range from 0 to 24**
False Color Sharpness	**adjustment range from 0 to 24**

Main Menu	
Advanced Settings	
OSD Messages	**ON** | **OFF**
Special Settings	*(see overview)*

Overview:	Special Settings	
	Zoom Extension	**ON**
	Max. Digital Zoom	**3.5x**
	Customize Buttons	
	Store User Settings	
	Recall User Settings	
	Reset to Factory Settings	
	Expert Settings	
	Monitor size	**Auto**
	Return	

Main Menu	
Advanced Settings	
Special Settings	
Zoom Extension	**ON** | **OFF**
Max. Digital Zoom	**OFF** | adjustment range from 1,5x to 15x

Main Menu	
Advanced Settings	
Special Settings	
Customize Buttons	
Zoom Push 1K	**Disabled** | **Auto-Focus** | **False Color**
Zoom Push 3K	**Disabled** | **Auto-Focus** | **False Color**
Zoom Hold 1K	**Disabled** | **Overview**
Zoom Hold 3K	**Disabled** | **Overview**
Bright. Pull	**Disabled** | **Ruler ON/OFF** By pulling the button brightness/contrast, the line marker and shadowing functions will be activated.

Main Menu	
Advanced Settings	
Special Settings	
Store User Settings	Confirm selection to the user setting to save
Recall User Settings	Confirm selection to the user setting restore
Reset to Factory Settings	Confirm to the factory setting restore
Expert Settings	Access - only by authorized service
Monitor size	**Auto** | **24"**

Warranty Information

1. Reinecker Vision GmbH grants a warranty of 24 months (warranty period only valid within the European Union) against defects in manufacture counted from date of invoice ex Reinecker Vision GmbH.
2. All parts that have been replaced when repairing the unit will automatically become property of Reinecker Vision GmbH.
3. Damage caused by improper use or by non-compliance with the operating instructions will result in the invalidation of the warranty.
4. Interventions from persons other than Reinecker Vision GmbH authorised specialists may lead to invalidity of warranty.
5. The liability for defects in material does not include illuminants that serve to illuminate the reading material and other parts subject to wear and tear, such as rechargeable batteries, etc.
6. If a warranty claim is necessary, the system has to be returned to the manufacturer in Alsbach-Hähnlein or to your authorized dealer in the original packaging including all components. The manufacturer does not carry the cost for transport, packaging and insurance. Prior to returning the system, a RMA number issued by Reinecker Vision is required. Please have the exact serial number of your system before hand.

   Phone number: +49 6257 9311-0

   View our General Terms and Conditions.

   Your authorized distributor:

Notes

Type:	VEO EDU (VEVED243)
Serial-Number:	
Manufacturer:	Reinecker Vision GmbH
Final examination:	
Power supply:	100 - 240 VAC 50/60 Hz
over plug- in power supply:	12V / 8A
Power consumption:	max. 96 Watt
Measurements (W x H x L):	approx. 54 x 76 x 60 cm
Weight:	approx. 15 kg

Reinecker Vision GmbH
International Contact

sales department, customer relations:
Sandwiesenstraße 19
DE-64665 Alsbach-Hähnlein

customer service:
Erlenweg 3
DE-64665 Alsbach-Hähnlein

Tel.: +49 6257 9311-0
Fax: +49 6257 9311-8230

E-Mail: international@reineckervision.de
www.reineckervision.com

SRN: DE-MF-000025998

In case service is necessary, please contact your authorized distributor.

Reinecker Vision GmbH
Zentrale

Vertrieb, Kundenberatung:
Sandwiesenstraße 19
64665 Alsbach-Hähnlein

Kundendienst:
Erlenweg 3
64665 Alsbach-Hähnlein

Tel.: 06257 9311-0
Fax: 06257 9311-8008

E-Mail: info@reineckervision.de
www.reineckervision.de

SRN: DE-MF-000025998

Bitte wenden Sie sich bei Fragen oder einem Servicefall direkt an unser Hauptwerk in Alsbach-Hähnlein.

Bei im Ausland erworbenen Produkten kontaktieren Sie im Servicefall bitte Ihren dort ansässigen Händler.

Version 1.4 Stand 01/24, Art.-Nr. 00002045
Subject to change.

REINECKER