User manual

MANO PRO

EN



Please read this user manual carefully prior to installation, use and maintenance for your own safety and in order to avoid damages on your system.

REINECKER

Content

I. General Information 4
I.I General Information – valid for MANOPRO2 6
I.II General Information – valid for MANOPRO2LV 8
II. Safety instructions 9
III. Instructions 10
Scope of delivery 10
Getting started 10
Charging the battery 10
Power indicator 10
Setting up MANO PRO 11
Description of the controls 13
Operation 14
Switching ON/OFF 14
Menu/Back button 14
Magnification 14
Full-page reading (A4) 15
Color mode 15
Orientation aids in the magnified image 15
Movement speed 16
The menu bar 16
Volume 17
Freeze frame 17
Autofocus 17
Change image view 17
Mirroring and operating smartphones 18
HDMI input 20
Read-aloud function (text to speech) 21
Operation in TTS mode 21
Image mode 21
Text mode 22
The main menu 23
Open document/image / File management 23
Opening and viewing images 25
Opening and viewing documents 25
Settings 26
Hardware reset 27
Handling the battery 27
IV. Troubleshooting 28
Troubleshooting smartphone mirroring 28
V. Warranty information 29
VI. Technical Details 30e

I. General Information

Important notes on the operation of MANO PRO!

Please read them carefully prior to the operation of the device!

Notes on the electromagnetic compatibility (EMC)

MANO PRO is suited for the use in all set-ups including the domicile that are connected directly to a public power supply for buildings with residential purposes.

MANO PRO is designed for the use in the indicated electromagnetic environment. The user should ensure the use in the indicated environment.

MANO PRO operates on HF-Energy exclusively for its own function. Therefore the emitted interference of high frequency disturbances is very low and the interference with other appliances operated close-by is improbable. When operating the system simultaneously with other systems, however, the possibility of disturbances of the system or other systems should not be neglected.

For this reason it should be ensured that the system is not placed directly beside or on top of another system. If the set-up of this system in the proximity of medical, measuring devices cannot be avoided, the operator of these devices has to be informed that it is necessary to observe the performance of the system to control the conventional use of the system in the chosen set-up.

Electronic devices are sensitive towards electric discharge and towards high frequency electromagnetic fields.

Attention:
In order to avoid high frequency disturbances (e.g. microwaves) the operator should respect a minimum distance of one meter/three feet to portable and mobile HF-telecommunication devices.

Please also see chapter „Safety advice“ on page 6 or on page 8.

Storage of the user manual

The user manual is an essential part of the system. Please keep the manual in a safe place for future reference.

Product description

MANO PRO is a portable video magnifier for magnifying text and images and converting and reproducing printed text into synthetic speech.

- 17.3" (approx. 43.9 cm) touch display offers extremely sharp and high-contrast images
- Approx. 1.8 to 85x continuous magnification thanks to state-of-the-art camera technology in close-up mode, up to approx. 30x in distance mode
- Split screen (2 camera images simultaneously)
- Reading camera with integrated LED lighting and distance camera
- Connect iPhones and Android smartphones for screen magnification, including operation via the touchscreen.

Cleaning of the system

- Before cleaning, disconnect the unit from the power supply.
- Clean the device with a mild household cleaner and a microfiber cloth.
- Do not allow any liquids to enter the device.

Special advice for transport and storage

For safety reasons, the unit must only be shipped in the original packing. The unit must be stored in dry and closed rooms in the original packing.

The following conditions for transport and storage have to be respected:

- Air pressure 700 to 1000 hPa
- Temperature range + 5 °C to + 50 °C
- Relative humidity 30% to 80%

Important note on reading, capturing and playback of medication leaflets

Dosage and quantity information from medication leaflets, read from the screen or, if a read-aloud function in your system is available, played back, must always be checked and re-confirmed independently! Always ask your doctor, pharmacist or a person you trust about dosing of medications!

Power supply

Only use the original power supply which is included in the delivery by Reinecker Vision GmbH.

Caution: The use of any other power supply besides the original, might lead to an increased electro-magnetic emission and to product damage.

Disposal or transfer of the device

This equipment may retain user settings and stored images if disposed of or transferred. As described on page 26, go to the device information in the settings and then to “Reset to factory settings” to remove all user settings. To remove all personal content from the device, follow the procedure in „Deleting all files from the device“ on page 24.

I.I General Information – valid for MANOPRO2

The order code of your device can be found on the type label on the device or on the packaging.

Purpose

The portable screen reading system MANO PRO is a medical device for magnifying text and images with voice output and mirroring of the smartphone display. Visually impaired people can compensate for their loss of visual acuity by using this device.

Medical device

This device is classified as a medical device, class I according to (EU) 2017/745, Annexe VIII, standard 13. For the distribution to countries outside the EU the respective country-specific guidelines have to be regarded.

Declaration of conformity, CE mark

CE You can request a copy of the declaration of conformity in written form from Reinecker Vision GmbH, Sandwiesenstr. 19, 64665 Alsbach-Hähnlein or view it at www.reineckervision.de/eu-doc

Evolution and lifetime of products

The Medical Device Directive regulates by law that manufacturers of medical devices shall determine a period of safety operation of a product. We fulfill hereby legal requirements and determine - for formal reasons - a period of three years after date of first purchase.

Note: The mentioned life span does not reflect the complete life span of the system. It is rather an indication on when the product might be obsolete and substitution might be recommended due to new product developments.

Combination with other medical devices

If the operator/user wants to operate this device in conjunction with other life sustaining medical devices, please get in touch with Reinecker Vision GmbH or with your local dealer, prior to operation.

Safety advice

The device has to be set up and operated in closed and dry rooms only. Do not plug the device into an electrical circuit that is also being used for any life sustaining or support systems. The device may not be used in the patients environment.

This device should not be operated in explosion-endangered environments. This device should only be installed in conjunction with a state-of-the-art electrical circuit.

Precautions by alteration of the performance of the device

Should any of the technical features or performances change (failure, malfunction etc.), the device must be turned OFF and the battery must be taken out. **Please do not switch ON the device again.** Refer directly to your authorized dealer or to Reinecker Vision GmbH Service Center.

Reinstatement, installation and maintenance

This device may be technically repaired and reconditioned by Reinecker Vision GmbH only or by an authorized technician. The device may only be used again after a safety check, thorough cleaning and disinfection.

Environmentally friendly disposal (Directive 2012/19/EU)



Within the EU the respective national implementations of the Directive 2012/19/EU for the sustainable re-use and proper recycling of electrical and electronic equipment applies.

MD

For countries outside the EU (e.g. Switzerland), the respective national implementations for the regulatory requirements for environmentally friendly disposal and recycling apply.

List of symbols used

	Manufacturer		Date and country of manufacture
#	Model number	REF	Catalogue number
SN	Serial number		Caution
MD	Medical device	UDI	Unique Device Identifier
	Consult instructions for use		Temperature limit

I.II General Information – valid for MANOPRO2LV

The order code of your device can be found on the type label on the device or on the packaging.

Purpose

MANO PRO is a system for magnifying text and images with voice output and mirroring of the smartphone display.

Declaration of Conformity (DoC), CE mark

CE

You can request a copy of the declaration of conformity in written form from Reinecker Vision GmbH, Sandwiesenstr. 19, 64665 Alsbach-Hähnlein or view it at www.reineckervision.de/int-doc

Safety advice

The device may only be set up and operated in closed and dry rooms. The device should not be operated in explosion-endangered environments. The device may only be connected to a state-of-the-art circuit.

Repair and maintenance

The device may only be serviced and repaired by Reinecker Vision GmbH or an authorized dealer.

Environmentally friendly disposal



The device contains electronic components.
To avoid environmental damage, the respective country-specific laws and regulations for the disposal of the device must be respected.

II. Safety instructions

Please respect the following safety instructions:

1. Do not plug the AC adapter into a faulty electrical outlet. Doing so may cause electrical shock or fire.
2. Do not touch the AC adapter with wet hands.
3. Only use the original power supply which is included in the delivery by Reinecker Vision GmbH. The use of any other equipment might lead to a product damage.
4. If the system is equipped with batteries, only original parts from Reinecker Vision GmbH should be used for replacement.
5. Do not expose the system to direct sunlight or extreme heat or cold temperatures, as this would harm the picture quality.
6. Do not operate this device below +10°C or above +35°C.
7. Keep liquids away from the system. Only operate the device in a dry environment.
8. The device should not be operated next to medical devices (patients environment).
9. Do not press or drag objects across the touch display. Do not lean on the screen or lay heavy objects on the device. This may cause damage to the device.
10. Do not try to repair or to dismantle the system on your own. That would immediately void the warranty. If you need any technical assistance please contact your distributor or Reinecker Vision GmbH.
11. Always turn the system OFF and disconnect it from the power supply before cleaning it. Only use a soft and slightly damped cloth. Only use a mild household detergent. Do not use alcohol containing or strong detergents.

III. Instructions

Scope of delivery

- MANO PRO
- Suction cup mount with adhesive pads
- Carrying bag
- Cleaning cloth
- Power supply with adapters
- USB Type-C cable
- Lightning to USB Type-C cable
- Quick start guide
- User manual

Getting started

Before using the device for the first time, you must fully charge the battery.

Charging the battery

Connect the supplied power cord to the device‘s charging socket, then plug the power adapter into a power outlet to start charging. A full charge takes approximately 3 hours and provides up to approximately 5 hours of operating time (depending on the operating mode).

For more information, see „Handling the battery“ on page 27

Caution: The supplied AC adapter is intended exclusively for use with this system. Do not use any other AC adapter.

Power indicator

The ON/OFF button symbol lights up in different colors to indicate different charging levels. The following status indicators are possible:

Device switched OFF, AC adapter connected:

- Power indicator green: Device is charging
- Power indicator OFF: Device is fully charged

Device switched ON:

- Power indicator green: sufficient battery charge or power adapter connected
- Power indicator red: Battery almost empty, device must be charged

When the device is switched ON, you can check the battery status on the display by briefly pressing the menu button.

Setting up MANO PRO

Carefully remove MANO PRO from the packaging and place the device on a stable, level surface.

The device should also be secured to the table with the suction cup mount to prevent it from accidentally tipping over.

Setting up MANO PRO with the suction cup mount

If the surface of the table is not smooth enough, attach the adhesive pad provided to the table before attaching the suction cup.



Slide the suction cup mount into the arm of the MANO PRO from the side.



Press the suction cup down and turn the gray ring clockwise until it clicks.

Removing the suction cup mount



Turn the gray ring counterclockwise.



Pull the rubber tab on the left side upwards to release the mount.

Note: Both the suction cup and the adhesive pad can be used multiple times. If the adhesive strength decreases, clean them with water and allow them to dry thoroughly before the next use.

Rotatable screen

Convert the horizontal screen into a vertical screen by turning the display clockwise, as shown in the illustration below..

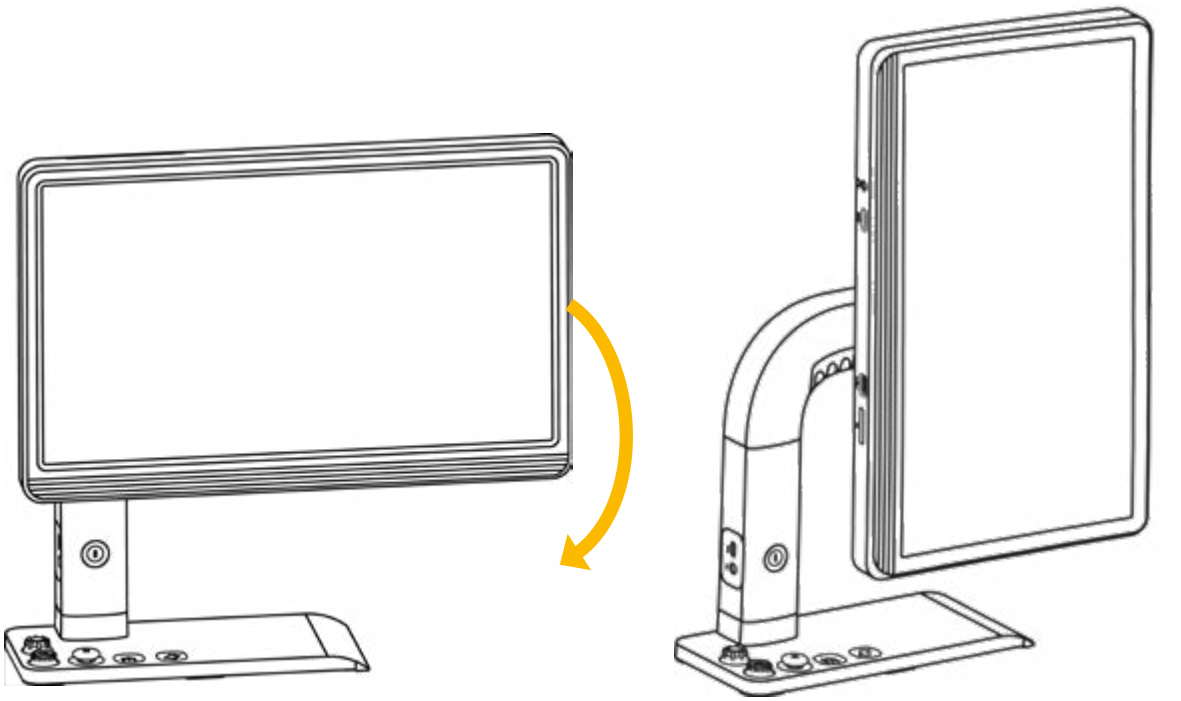

Folding out the distance camera

The folded camera arm is located behind the display and can be folded up.

The gray ring allows the distance camera to be rotated into different positions so that it can also be used as a mirror, for example. For more information about the various possible applications, see „Change image view“ on page 17.

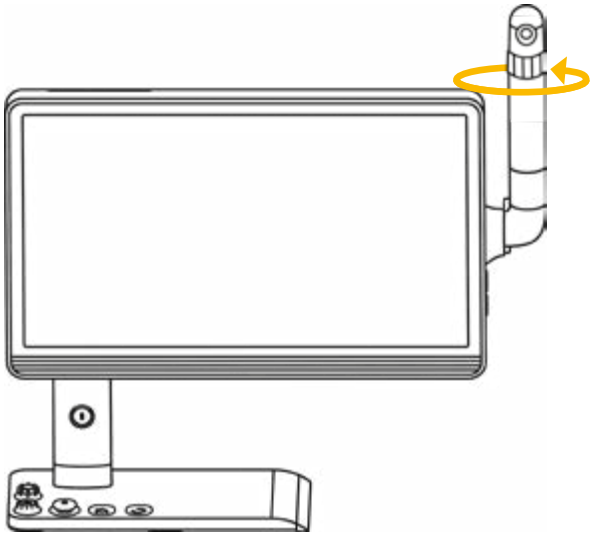

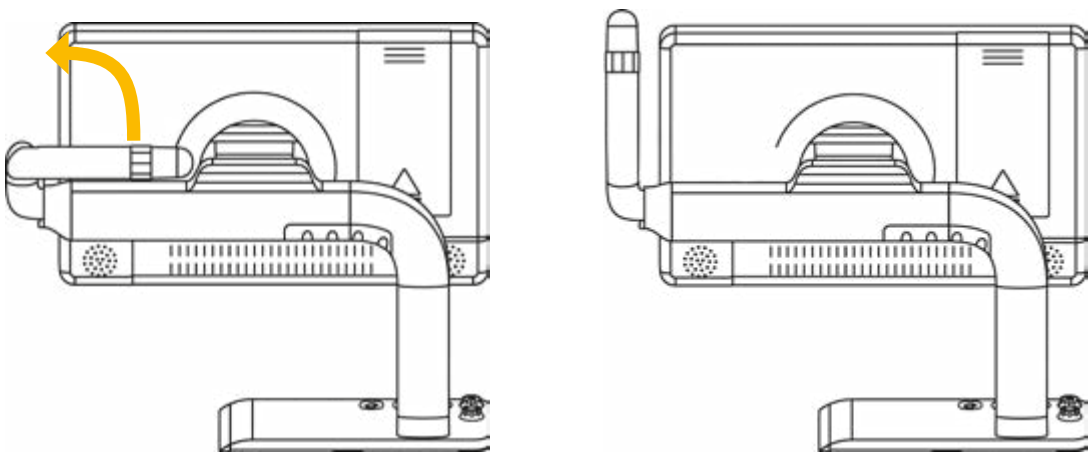

Description of the controls

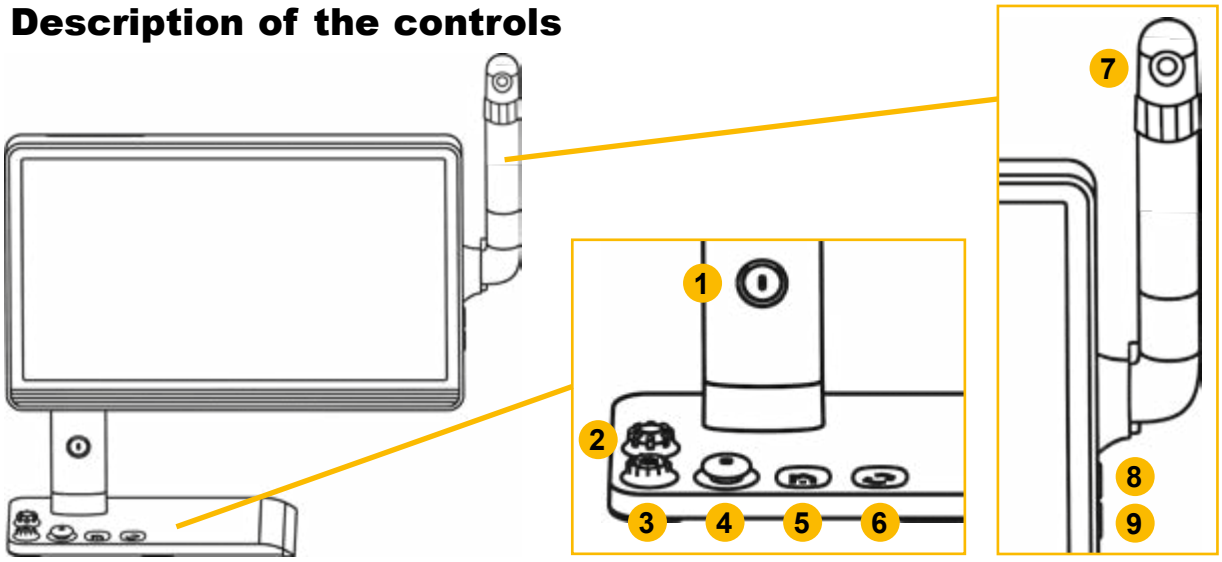

1) ON/OFF
2) freeze image/color mode (wide grooves)
3) magnification (narrow grooves)
4) joystick
5) home/main menu
6) camera switch/ switch
7) distance camera
8) volume +
9) volume -

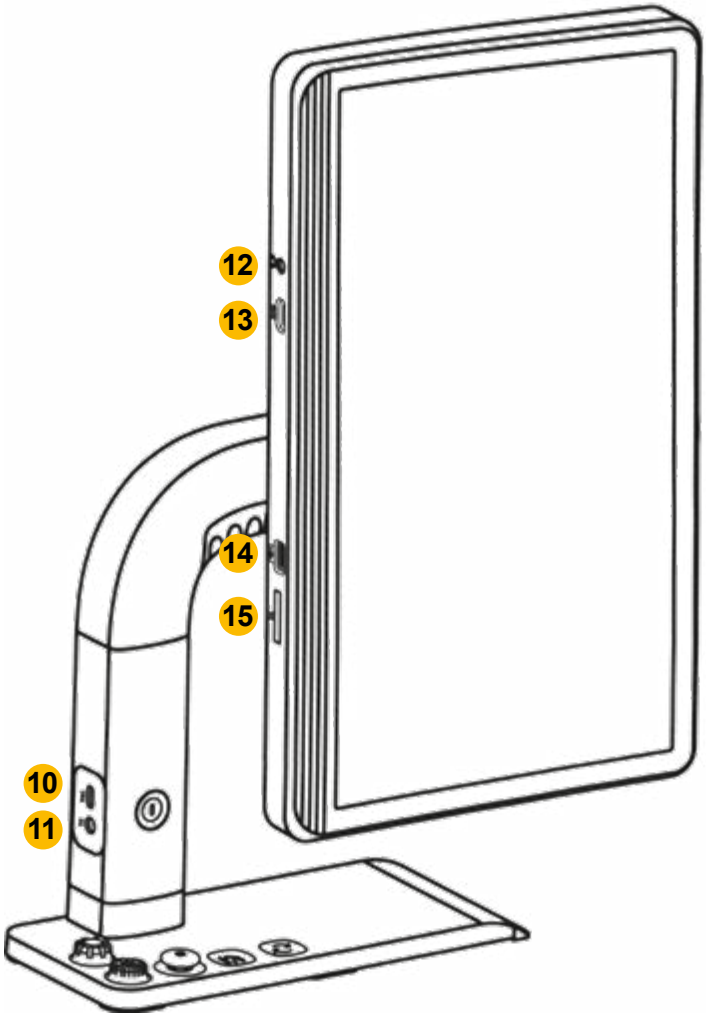

10) USB-C port (smartphone mirroring)
11) charging port
12) headphone/speaker jack
13) HDMI input
14) USB port
15) SD card slot

Operation



MANO PRO can be operated using buttons and the touchscreen. You can select menu items on the screen either by tapping the icon or by using the joystick to select „ .“ If you have selected the icon with the joystick, you must press the switch button on the far right to confirm your selection.

Switching ON/OFF



Press and hold the ON/OFF button for 3 seconds to switch ON MANO PRO. Press and hold the ON/OFF button to turn OFF the device.

Menu/Back button



Press the Menu button for approx. 2 seconds to access the main menu, where you can select the following functions:

- Magnifying glass
- Reading mode DIN A4
- Mirroring (smartphone)
- Open document/image
- Settings

The selected menu item is highlighted and you can select the corresponding icon on the touchscreen (or use the joystick to select and the switch button to confirm).

Press the menu button briefly to display the menu bar at the bottom of the screen when you are in magnification or TTS mode. The bar has different menu items depending on the mode, such as lighting ON/OFF or read-aloud speed control.

If you do not perform any operation for 10 seconds or briefly press the Menu button, the menu bar will close.

Note: In TTS mode, press and hold the menu button to stop reading aloud.

In menus, you can use the menu button to go back or close the menu.

Magnification



Turn the magnification knob clockwise to magnify the view and counterclockwise to reduce the view.



Alternatively, you can adjust the magnification with two fingers on the touchscreen by moving your fingers apart (to magnify) or toward each other (to zoom out).

Moving the magnified image

At higher magnification levels, you can navigate through the image by sliding your fingers across the touchscreen or using the joystick. This allows you to read comfortably without having to move the reading material under the device..

Full-page reading (A4)



The device can display an entire A4 page in portrait format so that you can view it magnified without having to move the reading material.

Press and hold the menu button to access the main menu. Tap the A4 icon to activate full-page mode.

Start read-aloud function



To enter TTS mode, press the ON/OFF button and select the read-aloud icon. For more information on operating MANO PRO in text-to-speech mode, see „Operation in TTS mode“ on page 21.

Color mode



True color mode is suitable for displaying images or maps. In semi color mode (a combination of foreground and background colors), texts can be read with high contrast.

Turn the color mode button to switch between true color and all activated semi color combinations.

You can select individual color combination options in the settings, which you can access via the main menu. There you can activate/deactivate the color combinations by tapping (or use the joystick to select and the switch button to confirm).

The following semi color combinations are available:

 white and black

 yellow and black

 white and blue

 blue and yellow

 green and black

 black and magenta

 black and blue

 white on red

 red on black

Tap the exit icon to leave the page with the individual color combinations (or press the menu button).

Orientation aids in the magnified image

Image position

Press the joystick to re-center the image.

Press the joystick twice quickly in one direction to jump to the edge of the original image.

Filled screen (portrait mode only)

When the screen is in portrait mode, press and hold the joystick for 2 seconds to magnify the image so that no black borders are visible.

Line ruler and line coverage

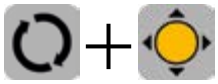

Press and hold the Switch button and press the joystick to switch between the different modes for line ruler and line cover.

You can change the color of the line ruler by holding down the Switch button and turning the color mode button.

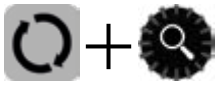

Hold down the Switch button and move the joystick to change the size and position of the line ruler and line cover.

Overview mode



When you are at a higher zoom level, you may lose track of where you are on your reading material. In overview mode, you can see the original image with a marker at the position you are currently viewing in the magnified image.

Press the magnify button briefly to see the unmagnified image. A yellow box marks the section of the magnified image. You can move the position of the box using the joystick or your finger on the display.

If you want to return to the original position, turn the magnification button in any direction. To center the magnified image section, press the joystick.

Press the magnification button again briefly (or double-tap the box) to return to the magnified image at the marked position.

Movement speed



At a higher zoom level, you can use your finger (or the joystick) to move the magnified image section to see more without moving the paper.

Press the joystick in any direction and press one of the volume buttons on the right side of the screen to display the pan speed bar.

To adjust the pan speed, press the volume buttons or slide the slider on the screen with your finger to the desired position.

No operation for 5 seconds or a short press of the menu button closes the slider.

The menu bar

In magnification mode or mirror mode, briefly press the menu button to display the menu bar.

If you do not operate the device for 10 seconds or briefly press the menu button, the menu bar will close.

You can use the menu bar to adjust the following settings:



- Lighting ON/OFF
- Adjust brightness
- View battery charge status
- Adjust contrast (separate values can be set for true color and semi color mode)
- Adjust saturation (in true color mode)

Volume



The key/voice volume and read-aloud volume can be adjusted separately, depending on which view you are currently in.

To do this, use the volume buttons on the right side of the device or slide the slider on the screen with your finger to the desired position.

Freeze frame



Press the color mode button to create a freeze image.
Press the button again to close the freeze image.

When viewing freeze images, you can change the magnification and color mode as described on page 14.

Saving a freeze image



In magnification mode, press and hold the color mode button for 3 seconds to save the current image.

For more information on the gallery, see page 25.

Autofocus



In most cases, autofocus will adjust the image so that it is sharp and easy to read. If this is not the case, you can refocus the image by tapping and holding your finger on the screen for 2 seconds.

Press and hold the Switch button, then press the Zoom button to enable or disable it.

If you want to write in MANO PRO, you should turn OFF autofocus before placing your hand to write. This prevents your hand or pen from being in focus instead of what you have written.

Change image view



MANO PRO offers different image views, such as split screen or mirror view, depending on how the distance camera is used and whether a smartphone is connected.

Switching the viewing mode

Press the switch button to switch between the three different view modes. The following views are available::



Close-up view



Distance view/mirror view

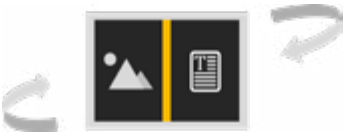

Vertically split screen

Setting the split screen

In split screen mode, you can see the images from the document camera and distance camera simultaneously. A yellow frame marks the active camera image, where you can adjust the magnification and color mode. If you want to select the other camera image, tap on it with your finger.

You can adjust the size ratio of the camera images by holding down the Switch button and moving the joystick to the left or right.

Various view settings for the distance camera



Turn the gray ring on the distance camera clockwise until the camera is pointing at you. At a certain position, the device automatically switches from distance mode to mirror view.

You can also flip the camera forward to use it as a second document camera for reading and writing.

The camera detects its position and automatically switches to the appropriate display mode.

Adjusting exposure



In distance view or mirror view, tap the exposure icon in the menu bar to switch between automatic and manual exposure.



Switching between magnification and smartphone mirroring



When the smartphone is connected, press and hold the switch button for 2 seconds to quickly switch between magnification mode and smartphone mirroring.

Mirroring and operating smartphones

MANO PRO offers the option of mirroring your smartphone screen on the display. To do this, your smartphone must have a USB-C or Lightning connector.

Mirroring and operating iPhones

Connect your iPhone to the USB-C port on MANO PRO using the cable provided, which is located on the left side next to the ON/OFF button. The mirrored screen will be displayed immediately. When connecting for the first time, tap “Trust” on the “Trust This Computer?” prompt to start screen mirroring. While wired screen mirroring is active, the time on the iPhone screen is displayed as 9:41; it returns to normal after you unplug the cable.

Phone settings: On your iPhone, go to Settings > Accessibility > Touch and turn on “AssistiveTouch”. Also turn on “Portrait Orientation Lock” in Control Center so that operation works in both landscape and portrait mode.

Bluetooth connection: Turn on Bluetooth on your iPhone while screen mirroring is active, search for the device “SC_Mirror****”, and tap it to pair and connect.

Operating the iPhone via MANO PRO

With iOS 17 or later, you can also operate your mirrored iPhone via the MANO PRO touch display. This requires a separate Bluetooth connection between the iPhone and MANO PRO.

- Only single-finger gestures are supported, such as tap, swipe, drag, and touch and hold.
- If complex accessibility features such as VoiceOver are enabled, operation via MANO PRO is limited. In this case, use the joystick and the other controls on MANO PRO to magnify the image and move the image section.
- MANO PRO can only be connected to one smartphone via Bluetooth at a time. Disconnect the Bluetooth connection of the previous smartphone before pairing a new one, or select “Manual” under Device Information > Bluetooth.

Mirroring and operating Android smartphones

You can also operate mirrored Android smartphones via the MANO PRO touch display. To do this, you need to install the MirrorPlay app.

MirrorPlay app

Please install the MirrorPlay app from the Play Store before connecting your smartphone to MANO PRO.

Simply scan the QR code to go directly to the app or use the search function in the Play Store.

After installation, connect your smartphone to the USB-C port on MANO PRO using the cable provided, which is located on the left side next to the ON/OFF button.

When you open or restart the app after the initial installation, please follow the instructions to grant the necessary permission to activate smartphone screen mirroring. To do this, you must grant permission to access the microphone. This is mandatory for using the app.
After authorization, screen mirroring is usually activated automatically as soon as the USB Type-C cable is reconnected. You can choose whether you want to share a specific app or the entire screen.



App screen:
Smartphone successfully connected



App screen:
Smartphone not connected

Changing the setting for automatic display shutdown

To make using the touchscreen more comfortable, the app can adjust the time after which the display automatically turns OFF.

If your smartphone is connected to MANO PRO, the time is automatically set to 10 minutes and reset to your default value as soon as you disconnect your smartphone from MANO PRO.

This feature is optional. To use it, you must allow the app to change system settings. To do this, select the checkbox for „Allow changing system settings“ in the app settings.

If this setting does not work automatically, you can also set the lock time manually in your smartphone settings.

To do this, go to „Display & Touch Control“ and manually set the time under „Automatically turn OFF display.“

Note: Depending on the model and operating system, the names of the menu items may vary.

Picture-in-picture display

When the smartphone mirroring is displayed, you can press the Switch button to display the image from the distance camera in a small window. The image overlays the image on the smartphone display.

You can also adjust the distance camera image. To do this, tap on the distance camera image, which now has a yellow mark. You can now adjust the magnification and color mode as usual using the buttons on the device. If you want to change the smartphone settings, tap on the smartphone screen. The distance camera image now has a gray frame.

You can change the position of the image by moving it with your finger. You can drag the corners of the image to make it larger or smaller.

HDMI input



The device supports external HDMI audio and video sources with a video resolution of 1920x1080. Once a connection is established, the distance camera display will switch to the HDMI input display.

The HDMI port is located on the bottom of the display.

Read-aloud function (text to speech)



There are two text recognition or OCR (Optical Character Recognition) modes that you can choose between before capturing. You can either capture an entire A4 page and have it read aloud, or just the text of the magnified image section. Please switch to the appropriate viewing mode via the menu before capturing text.

Press the ON/OFF button and then tap the read aloud icon to capture the displayed image section and enter read aloud mode. MANO PRO automatically recognizes and corrects the image orientation.

Hold down the menu button to exit TTS mode.

Operation in TTS mode

A loading icon appears while the text is being captured. The capture time depends on the structure and amount of text. Once text capture is complete, the menu bar appears, allowing you to set the read-aloud functions.



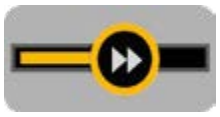

Touch the slider for the reading speed and move it to adjust the reading speed



Press the zoom button to quickly return to the original size if the content has been magnified.

If you do nothing for 10 seconds or briefly press the menu button, the menu bar will close.



Press and hold the Menu button or tap the Exit icon to exit TTS mode.



Press and hold the color mode button to save the image and captured text.

Image mode



In image mode, the layout of the content remains the same as in the captured image. To magnify, to shrink, moving the image section, and various color modes are still available.

Segmentation enabled



When the segmentation function is activated, the content is automatically divided into several sections. The selected section is read aloud.



Tap the play or pause icon in the menu bar or press the Switch button to start/pause reading of the selected section.



Tap the Back/Next icon to jump to the previous/next section and select it.



If playback is paused, you can select another section by tapping briefly.


Press and hold a section to select it and start reading aloud immediately.


During playback, you can double-tap to jump to another location in the segment and it will be read aloud from there.

Segmentation disabled


Here, the captured text is not divided into sections, but is recognized as continuous text and the active position in the text is highlighted in color. You can use the forward/back buttons in the menu bar or the touchscreen to move to another position.


Tap the play or pause icon in the menu bar or press the Switch button to start/pause reading of the highlighted sentence.


Press and hold a line to highlight it and start reading it aloud immediately.
.


During playback, you can double-tap to jump to another location in the document and it will be read aloud from there.

Text mode


In text mode, you will not see the original image, only the captured text. You can magnify the text as usual, change the color mode, and move the displayed text with your fingers or the joystick.
When playback is paused, you will see a scroll bar on the right side of the image for longer texts. When you move the bar, the highlighted content changes accordingly.


Press and hold on another location in the document to start reading aloud from that line.


During playback, you can double-tap to jump to another location in the document and it will be read aloud from there.
If playback is paused, you can double-tap at the top or bottom to jump to the beginning/end of the displayed text.

Depending on the settings you previously made in image mode,
you will have different display and navigation options:

Segmentation was enabled in image mode


Tap the play or pause icon in the menu bar or press the Switch button to start/stop reading the displayed section.


You will only see the text of the active section and can use the arrow keys to switch back and forth between all sections of the document.

Segmentation was deactivated in image mode

You see the entire text. The arrow keys are inactive and reading aloud starts at the beginning of the document.


Tap the play or pause icon in the menu bar or press the Switch button to start/pause reading aloud

The main menu

Please use the screen in landscape mode, as automatic image rotation is disabled.

Press the menu button for about 2 seconds to access the main menu, where you can select the following functions:

- Magnifying glass
- Reading mode DIN A4
- Mirror
- Open document/image
- Settings

The selected application is highlighted. Select the corresponding icon on the touchscreen (or move the joystick to select and press the Switch button to confirm).

In the menu, you can use the menu button to go back or close the menu.

Open document/image / File management

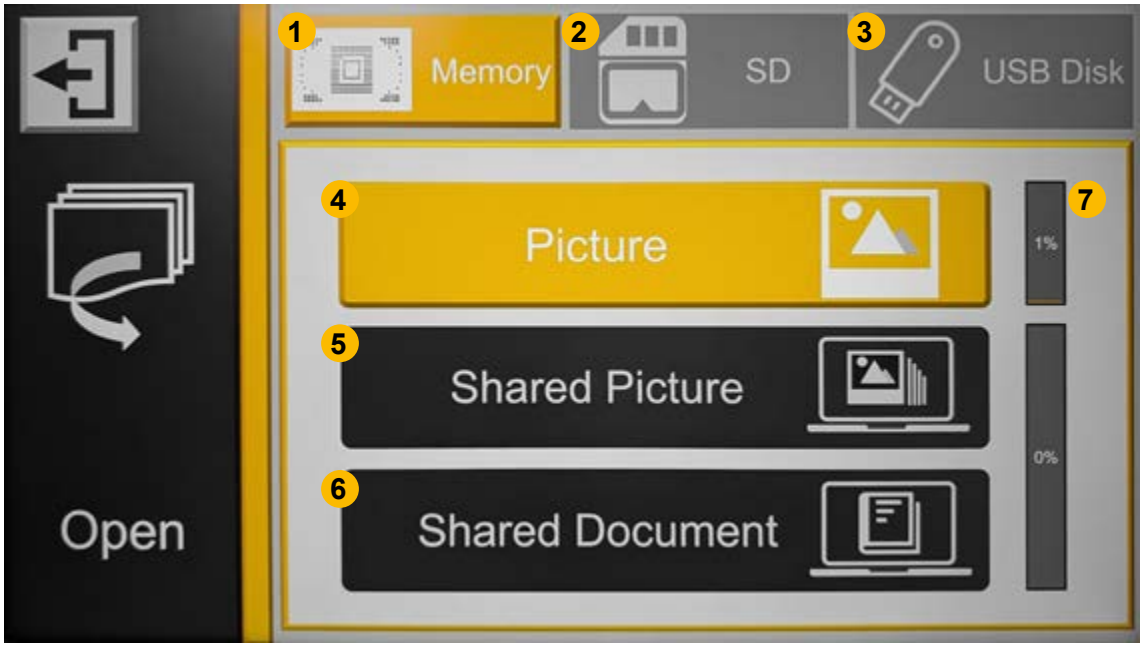

In this menu, you can open images and texts, view them magnified, have them read aloud, and copy saved files to an SD card or USB stick. If you want to view external images, text files, or PDFs on MANO PRO, you can copy them to the device from an SD card or USB stick.

Once you have opened the memory, you will first see the folders in the internal memory (1). If an external SD card (2) is inserted or a USB stick (3) is connected, you can view the contents by pressing the icon in the top right corner or turning the color mode knob and copy them to the device. The storage media should be formatted with FAT32/exFAT.

You can view images as usual and have the text read aloud. Texts are displayed in text mode and can be used as described on page 22 .

Managing files on the device

Here you will see four different folder icons in which the files are sorted by type and origin. In the first row, you can open images (4) that you have previously saved by pressing and holding the color mode button.

In the second row, you will see images (5) and texts (6) that you have previously copied to your device from an SD card or USB stick.

On the right-hand side, you can see the percentage of storage space used (7).

Multiple selection

In a folder, tap and hold a specific image or document (or press and hold the Switch button) to enable or disable multiple selection. When multiple selection is enabled, a small box appears in the lower right corner of each image. Tap the box (or select it with the joystick and Switch button) to select all target images/documents. You can then perform multiple transfer or multiple deletion as described below.

To exit the selection, tap and hold the screen or the exit icon (or briefly press the menu button or long press the color mode button).

Copying files from an SD card/USB stick to the device



Open the SD card (2) or USB stick (3) in the Files menu, select the desired files, and press the Copy icon in the left column.

Supported image formats are JPG, BMP, and PNG, as well as TXT and PDF for documents. These files can be found under External Image (5) and Shared Document (6).

Copying stored files to an SD card/USB stick



Images and documents from the internal memory can be transferred to an external SD card or USB stick when these are inserted. Select the desired image/document in the internal memory and then tap the copy icon (or press the color mode button) to start the transfer. If both an SD card and a USB stick are inserted, a window will open in which you must select the external storage medium before the transfer.

Tap the copy icon for 3 seconds (or hold down the color mode button) to select all images/documents and transfer them to the external storage medium.

You can also transfer only certain images that you have previously marked in the multiple selection.

Deleting all files from the device



Go to the folder overview by selecting „Open“ in the main menu. Press and hold the zoom button for approx. 5 seconds and confirm the deletion process by pressing again or cancel the process by pressing any button.

Deleting files in a folder



Select the file you want to delete and tap the trash can icon at the bottom left or press the magnifying glass button. You must then press the button again to confirm the deletion process. If you want to cancel the deletion process, press another button or tap another area of the display.

If you want to delete all files in the open folder, press and hold the trash can icon or the magnifying glass button for about 5 seconds and confirm the deletion by pressing again, or cancel the process as described above.

You can also delete specific images that you have previously selected in the multiple selection.

Opening and viewing images

Open the image folder on the device or SD card/USB stick. If there are many files in the folder, you can scroll up or down using the slider on the right side of the screen or the joystick.

Tap the thumbnail to select it and tap it again (or press the Switch button) to view the image.



If the image was saved in TTS mode, the captured text was also saved. Tap the text icon in the upper left corner of the thumbnail to open the text.

You can view and navigate the image as described in the section „Freeze frame“ on page 17.

Press the Menu button to display the menu bar



Tap one of the arrows in the menu bar to scroll back/forward through the images..



Tap one of the double arrows in the menu bar to go to the beginning or end of the images



To rotate the image, tap the rotate icon in the menu bar. The last orientation is saved automatically.

Tap the Exit icon (or press and hold the Menu button) to return to the gallery.

Opening and viewing documents

Here you can view the text and PDF files that you previously copied from an SD card/USB stick. If an image has been saved in TTS mode, you will find a text icon in the upper left corner of the thumbnail image that you can use to open the text.

Tap the document twice to open it and view the captured text. Alternatively, you can open the document using the joystick and the Switch button. Tap the Exit icon (or press and hold the Menu button) to return to the gallery.

Viewing and reading text files and PDFs



Tap one of the arrows in the menu bar to scroll back/forward one page. Hold down the button to scroll back/forward 10 or 50 pages at a time.



Tap one of the double arrows in the menu bar to go to the beginning or end of the PDF.



In PDFs, you can also switch between image and text view.



To start the read-aloud function within a text file or PDF, tap the read-aloud icon in the menu bar. The page will now be displayed in text mode and can be operated as described above.

Settings

The last item in the main menu is Settings, which contains the following submenus:



options



device information

Tap the desired submenu (or turn the color mode button) to display the available options and change the setting by tapping the desired item (or move and press the joystick to select the item).

Options page

Individual color combinations

Here you can select which color combinations are displayed in semi color (artificial color) mode.

Energy saving

When this function is active, the device will switch OFF in magnification mode if it has not been used for 5 minutes.

Voice guidance

Menus and functions are not only displayed, but also named with voice prompts.

Voice selection

Here you can switch between the currently available languages. The setting changes the language in menus and voice output.

Male/female voice selection

Here you can also choose between US, UK, and AU voices in English.

Device information

Reset to factory settings

Here you can reset the device to the factory settings. After resetting, the device will automatically switch OFF.

Frequency
Frequency offers the options 50 Hz and 60 Hz, which can be changed depending on the region you are in. If the image flickers, changing the frequency may improve the situation.

Bluetooth
Displays the Bluetooth name and connection status, and allows you to switch between Bluetooth modes:
Automatic: Automatically connects to the last connected smartphone when Bluetooth is active
Manual: Forces pairing every time a Bluetooth connection is established.

System information
Here you can view information such as the current firmware version.

Hardware reset



If the device freezes or cannot be turned OFF normally, press the ON/OFF button and both volume buttons simultaneously to perform a hardware reset.

Handling the battery

Caution: To ensure a long battery life, it is essential to follow the instructions for operating and charging the battery correctly.

The battery must be fully charged before first use.
To do this, plug the power adapter into the charging socket on the left side.

If MANO PRO is not used for a long period of time, the battery will lose its charge even when the device is switched OFF, which may result in deep discharge and damage to the battery. This can be avoided by fully charging the battery beforehand.

Replacing the battery

The battery can be removed from the device without tools. It is located on the back of the display. To remove it, slide the battery cover with the ribbed marking upwards.

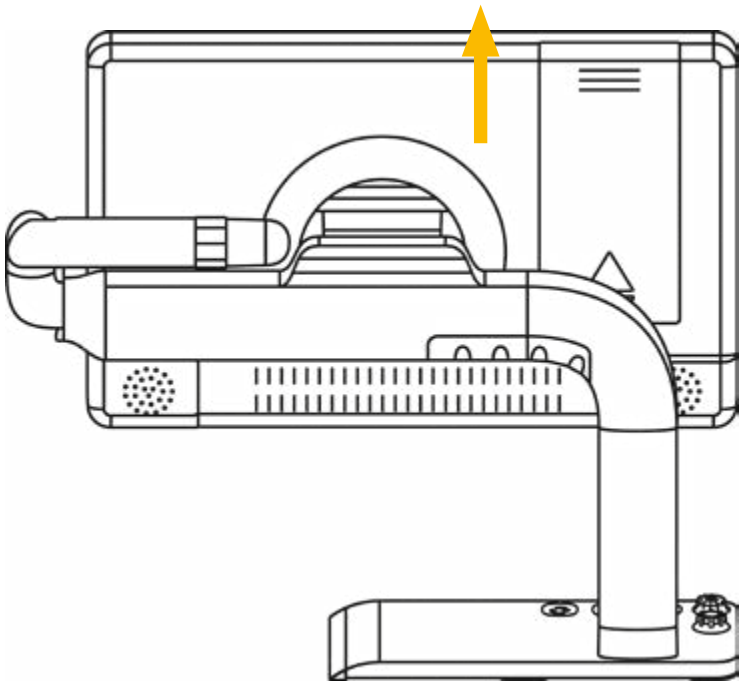

IV. Troubleshooting

The device cannot be switched ON
- Connect the device to the power adapter.
- Charge the battery.

The device cannot be turned OFF
- Perform a hardware reset by pressing the ON/OFF button and both volume buttons simultaneously.

Black screen or white screen
- If the device is placed on a flat, clean surface or there is nothing on the base plate, the screen may be black or white.
- Adjust the magnification.
- Adjust the color mode.
- Restart the device.

The image does not change
- The device may be in freeze image or playback mode.
- Restart the device.

Dirt or impurities on the screen
- Adjust the brightness.
- Clean the LCD screen and camera.

The image is blurry
- Check whether autofocus is disabled.
- Move your hand back and forth over the displayed document to trigger the autofocus.
- Tap the screen for 2 seconds to trigger the focus manually.

If the problem persists, reset the device to factory settings and perform a hardware reset. If you continue to experience problems, please contact Reinecker Vision GmbH or your authorized distributor.

Troubleshooting smartphone mirroring

The screen goes black after transmission
- The smartphone is locked.
  ► Unlock the smartphone.
- The password login page cannot be transferred for security reasons. ►
  Enter the password on the smartphone so that the screen can be mirrored after login.
- Videos with copyright restrictions cannot be transferred.
  ► Switch to other videos without copyright restrictions.

The image and video will be displayed normally after transfer, but the sound will remain on the smartphone
- For versions prior to Android 10.0, only image and video data can be transferred.
  ► Use a smartphone with Android 10.0 or higher.

- Browsers such as Chrome/Edge do not allow audio to be transferred.
  ► Listen to the sound on your smartphone or switch to other browsers such as Firefox.

No voice from the device during voice or video calls

- Phone calls may not be recorded, so only media audio can be transmitted.
  ► Make calls with your smartphone.

Gallery and chat app are blurred after screen mirroring (e.g., on some Xiaomi smartphones)

- Screen sharing protection is enabled to prevent telecommunications fraud or espionage.
  ► Go to your smartphone‘s settings -> Privacy & Security -> Security -> Fraud Protection and disable this option.

Re-plugging the cable does not restore mirroring, and the locked screen remains displayed

- Occasional screen mirroring issue on iOS systems.
  ► Restart the iPhone. Updating iOS can reduce the occurrence.

Operating the iPhone via MANO PRO does not respond or responds abnormally

- iOS occasionally responds abnormally to Bluetooth devices.
  ► If only taps are recognized but not swipes, re-enable “AssistiveTouch” or restart the iPhone; otherwise reconnect Bluetooth or the cable.

V. Warranty information

Warranty information

1. Reinecker Vision GmbH grants a warranty of 24 months (warranty period only valid within the European Union) against defects in manufacture counted from date of invoice ex Reinecker Vision GmbH.
2. All parts that have been replaced when repairing the unit will automatically become property of Reinecker Vision GmbH.
3. Damage caused by improper use or by non-compliance with the operating instructions will result in the invalidation of the warranty.
4. Interventions from persons other than Reinecker Vision GmbH authorized specialists may lead to invalidity of warranty.
5. The liability for material defects does not include light sources serving to illuminate the reading object and other parts subject to wear and tear, e.g. rechargeable batteries.
6. If a warranty claim is necessary, the system has to be returned to the manufacturer in Alsbach-Hähnlein or to your authorized dealer in the original packaging including all components. The manufacturer does not carry the cost for transport, packaging and insurance. Prior to returning the system, a RMA number issued by Reinecker Vision is required. Please have the exact serial number of your system before hand.

Phone number: +49 6257 9311-0

View our General Terms and Conditions.

VI. Technical Details

Type	MANO PRO (MANOPRO2/MANOPRO2LV)
Display	FullHD 17,3" (approx. 43,9 cm) touch display, rotatable and tiltable, resolution: 1920 x 1080
Cameras	Ultra HD 4K cameras (48 MP), video resolution 3840 x 2160 px
Zoom	Document view: 1.8-85x, distance camera up to approx. 30x
Color mode	True colors, up to 16 semi colors adjustable
Freeze image function	Image storage, storage capacity: approx. 2 GB
External file formats	Image formats: JPG, BMP, PNG Document formats: TXT, PDF
Rechargeable battery	replaceable Li-Ion battery, 8700 mAh
Operating time	up to approx. 5 hours (depending on use)
Charging time	approx. 3 hours
Power adapter	Input: 110-240V; Output: 12V / 3A
Dimensions	approx. 47 x 40 x 11.1 cm / 18.5 x 15.7 x 4.4 in
Weight	3.6 kg (including battery)

Manufacturer

Reinecker Vision GmbH
International Contact

sales department, customer relations:
Sandwiesenstraße 19
DE-64665 Alsbach-Hähnlein

customer service:
Erlenweg 3
DE-64665 Alsbach-Hähnlein

Tel.: +49 6257 9311-0
Fax: +49 6257 9311-8230

Email: international@reineckervision.de
www.reineckervision.com

SRN: DE-MF-000025998

In case service is necessary, please contact your authorized distributor.

Hersteller

Reinecker Vision GmbH
Zentrale

Vertrieb, Kundenberatung:
Sandwiesenstraße 19
64665 Alsbach-Hähnlein

Kundendienst:
Erlenweg 3
64665 Alsbach-Hähnlein

Tel.: 06257 93 11-0
Fax: 06257 93 11-8008

Email: info@reineckervision.de
www.reineckervision.de

SRN: DE-MF-000025998

Bitte wenden Sie sich bei Fragen oder einem Servicefall direkt an unser Hauptwerk in Alsbach-Hähnlein.

Bei im Ausland erworbenen Produkten kontaktieren Sie im Servicefall bitte Ihren dort ansässigen Händler.

Version 2.1, as of 11/26, item no. 00020557
Subject to change.

REINECKER