user manual

MANO 6

EN

video instructions

Please read this user manual carefully prior to installation, use and maintenance for your own safety and in order to avoid damages on your system.



REINECKER

Content

I. General Information 6
I.I General Information – valid for MANO6001 10
I.II General Information – valid for MANO6001LV 16
II. Safety instructions 18
III. Instructions 20
1. Scope of supply 20
2. Commissioning 20
Charging the battery 20
Power button 21
Folding stand 22
Handle 23

3. Operation 24
Compositions 24
Turning ON/OFF 26
Menu 26
Magnification 27
Moving the magnified image 28
Brightness 28
Color modes 29
LED lighting 30
Freeze image 30
Image gallery 31
Copy pictures to a microSD card 32
Delete saved images 33
Line marker and mask 34
Autofocus 35

Refresh rate 35
Memory 35
Energy saving mode 36
Reset to default factory settings 36
Hardware reset 36
Battery charging 37
IV. Troubleshooting 38
V. Warranty information 39
VI. Technical details 41

I. General Information

Important notes on the operation of MANO 6!

Please read them carefully prior to the operation of the device!

Notes on the electromagnetic compatibility (EMC)

MANO 6 is suited for the use in all set-ups including the domicile that are connected directly to a public power supply for buildings with residential purposes.
MANO 6 is designed for the use in the indicated electromagnetic environment. The user should ensure the use in the indicated environment.
MANO 6 operates on HF-Energy exclusively for its own function. Therefore the emitted interference of high frequency disturbances is very low and the interference with other appliances operated close-by is improbable. When operating the system simultaneously with other systems, however, the possibility of disturbances of the system or other systems should not be neglected.
For this reason it should be ensured that the system is not placed directly

beside or on top of another system. If the set-up of this system in the proximity of medical, measuring devices cannot be avoided, the operator of these devices has to be informed that it is necessary to observe the performance of the system to control the conventional use of the system in the chosen set-up.
Electronic devices are sensitive towards electric discharge and towards high frequency electromagnetic fields.

Attention: In order to avoid high frequency disturbances (e.g. microwaves) the operator should respect a minimum distance of one meter/three feet to portable and mobile HF-telecommunication devices.
Please also see chapter „Safety advice“ on page 13 or on page 16.

Storage of the user manual
The user manual is an essential part of the system. Please keep the manual in a safe place for future reference.

Product description

MANO 6 is a system to magnify text and images with the following benefits:

- wide screen LCD touch display of approx. 14 cm in diagonal which offers an extremely sharp picture display in high contrast
- continuous magnification from approx. 2x to approx. 35x, thanks to the innovative and state of the art camera technology
- ergonomic design with fold out stand and handle; compact and easy to use
- light weight, 274 g only, which allows comfortable hand operation at home or on the go

Cleaning of the system

Before cleaning, disconnect the unit from the power supply.
Clean the device with a mild household cleaner and a microfiber cloth.
Do not allow any liquids to enter the device.

Special advice for transport and storage

For safety reasons, the unit must only be shipped in the original packing. The unit must be stored in dry and closed rooms in the original packing. The following conditions for transport and storage have to be respected:

- Air pressure 700 to 1000 hPa
- Temperature range + 5 °C to + 50 °C
- Relative humidity 30% to 80%

Important note on reading, capturing and playback of medication leaflets

Dosage and quantity information from medication leaflets, read from the screen or, if a read-aloud function in your system is available, played back, must always be checked and reconfirmed independently! Always ask your doctor, pharmacist or a person you trust about dosing of medications!

Power supply

Only use the original power supply which is included in the delivery by Reinecker Vision GmbH.

Caution: The use of any other power supply besides the original, might lead to an increased electromagnetic emission and to product damage.

Disposal or transfer of the device

This equipment may retain user settings and stored images if disposed of or transferred. Prior to disposing or transferring MANO 6, remove all personal content from the device, as described in „Reset to default factory settings“ on page 36.

I.I General Information – valid for MANO6001

The order code of your device can be found on the type label on the device or on the packaging.

Purpose

This electronic magnifier with voice output is a medical device to assist with the reading and magnifying of printed text and pictures. Visually impaired people can compensate for their loss of visual acuity by using this device.

Medical device

This device is classified as a medical device, class I according to (EU) 2017/745, Annexe VIII, standard 13. For the distribution to countries outside the EU the respective country-specific guidelines have to be regarded.

Declaration of conformity, CE mark

CE

You can request a copy of the declaration of conformity in written form from Reinecker Vision GmbH, Sandwiesenstr. 19, 64665 Alsbach-Hähnlein or view it at www.reineckervision.de/en/eu-doc

Evolution and lifetime of products

The Medical Device Directive regulates by law that manufacturers of medical devices shall determine a period of safety operation of a product. We fulfill hereby legal requirements and determine - for formal reasons - a period of three years after date of first purchase.

Note: The mentioned life span does not reflect the complete life span of the system. It is rather an indication on when the product might be obsolete and substitution might be recommended due to new product developments.

Combination with other medical devices

If the operator/user wants to operate this device in conjunction with other life sustaining medical devices, please get in touch with Reinecker Vision GmbH or with your local dealer, prior to operation.

Safety advice

The device has to be set up and operated in closed and dry rooms only. Do not plug the device into an electrical circuit that is also being used for any life sustaining or support systems. The device may not be used in the patients environment.

This device should not be operated in explosion-endangered environments. This device should only be installed in conjunction with a state-of-the-art electrical circuit.

Precautions by alteration of the performance of the device

Should any of the technical features or performances change (failure, malfunction etc.), the device must be turned OFF and the battery must be taken out. **Please do not switch ON the device again.** Refer directly to your authorized dealer or to Reinecker Vision GmbH Service Center.

Reinstatement, installation and maintenance

This device may be technically repaired and reconditioned by Reinecker Vision GmbH only or by an authorized technician. The device may only be used again after a safety check, thorough cleaning and disinfection.

Environmentally friendly disposal (Directive 2012/19/EU)



MD

Within the EU the respective national implementations of the Directive 2012/19/EU for the sustainable re-use and proper recycling of electrical and electronic equipment applies.
For countries outside the EU (e.g. Switzerland), the respective national implementations for the regulatory requirements for environmentally friendly disposal and recycling applies.

List of symbols used

	Manufacturer		Country of manufacture
	Model number		Catalogue number
	Serial number		Caution
	Medical device		Unique Device Identifier
	Consult instructions for use		Temperature limit

I.II General Information – valid for MANO6001LV

The order code of your device can be found on the type label on the device or on the packaging.

Purpose

MANO 6 is a system for magnifying text and pictures.

Declaration of Conformity (DoC), CE/FCC mark

You can request a copy of the declaration of conformity in written form from Reinecker Vision GmbH, Sandwiesenstr. 19, 64665 Alsbach-Hähnlein or view it at www.reineckervision.de/en/int-doc

Safety advice

The device may only be set up and operated in closed and dry rooms. The device should not be operated in explosion-endangered environments.The device may only be connected to a state-of-the-art circuit.

Repair and maintenance

The device may only be serviced and repaired by Reinecker Vision GmbH or an authorized dealer.

Environmentally friendly disposal



The device contains electronic components.
To avoid environmental damage, the respective country-specific laws and regulations for the disposal of the device must be respected.

II. Safety instructions

Please respect the following safety instructions:

1. Do not plug the AC adapter into a faulty electrical outlet. Doing so may cause electrical shock or fire.
2. Do not touch the AC adapter with wet hands.
3. Only use the original power supply which is included in the delivery by Reinecker Vision GmbH. The use of any other equipment might lead to a product damage.
4. If the system is equipped with batteries, only original parts from Reinecker Vision GmbH should be used for replacement.
5. Do not expose the system to direct sunlight or extreme heat or cold temperatures, as this would harm the picture quality.
6. Do not operate this device below +10°C or above +35°C.
7. Keep liquids away from the system. Only operate the device in a dry environment.
8. The device should not be operated next to medical devices (patients environment).

9. Do not press or drag objects across the touch display. Do not lean on the screen or lay heavy objects on the device. This may cause damage to the device.
10. Do not try to repair or to dismantle the system on your own. That would immediately void the warranty. If you need any technical assistance please contact your distributor or Reinecker Vision GmbH.
11. Always turn the system OFF and disconnect it from the power supply before cleaning it. Only use a soft and slightly damped cloth. Only use a mild household detergent. Do not use alcohol containing or strong detergents

III. Instructions

1. Scope of supply

In the scope of supply of MANO 6 you will find the following articles :

- MANO 6
- protective bag
- power adapter
- microfiber cloth
- short hand strap
- long hand strap
- quick reference guide
- user manual

2. Commissioning

Charging the battery

Before using the device for the first time, you must fully charge the battery. For further information, see „Battery charging“ on page 37.

Caution: The AC adapter supplied with the unit is designed to operate this system only. Do not use any other AC adapter.

Power button

When the device is switched OFF, the power button which is located at the left side of the unit lights up green during charging and switches OFF automatically when fully charged.

A full charge takes about 2.5 hours and will allow the unit to work for about 3 hours (depending on the operation mode).

When the unit is switched ON, the power button of the unit lights up green during charging.

If the unit is not connected to the mains when switched ON, you can see the charge status on the power button. When the battery level is high, the power button lights green. If the battery level is low, the power button lights red. If the power button flashes red, the battery must be charged immediately.

The battery status can be checked by briefly pressing the power button. Press this button again to exit the menu.

Folding stand

Hold the rear side of the stand in the recess above the yellow arrow and unfold the stand as shown. The system will turn ON automatically.

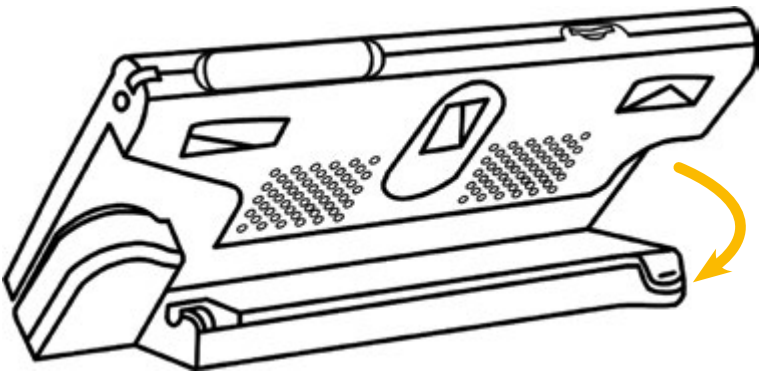

Handle

Make sure that the stand is folded. Then move the handle in the direction of the arrow.

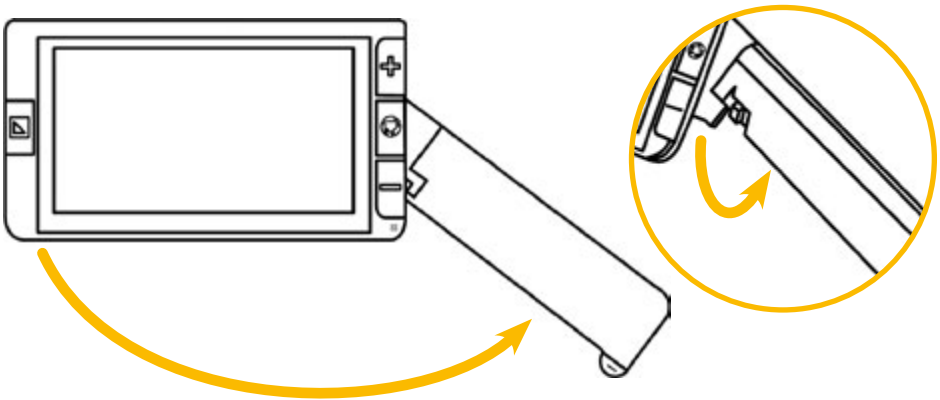

Depending on the holding angle, the handle can be turned slightly to increase the reading comfort with MANO 6.

3. Operation

Compositions

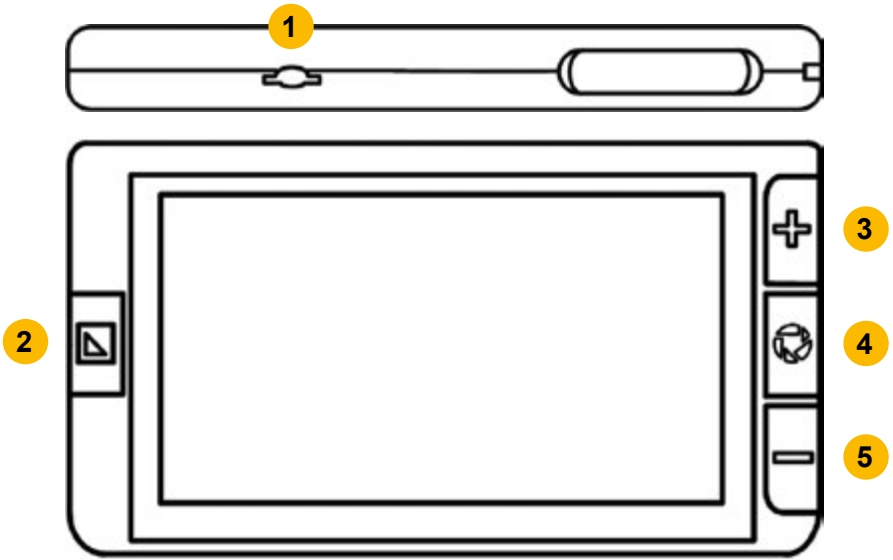

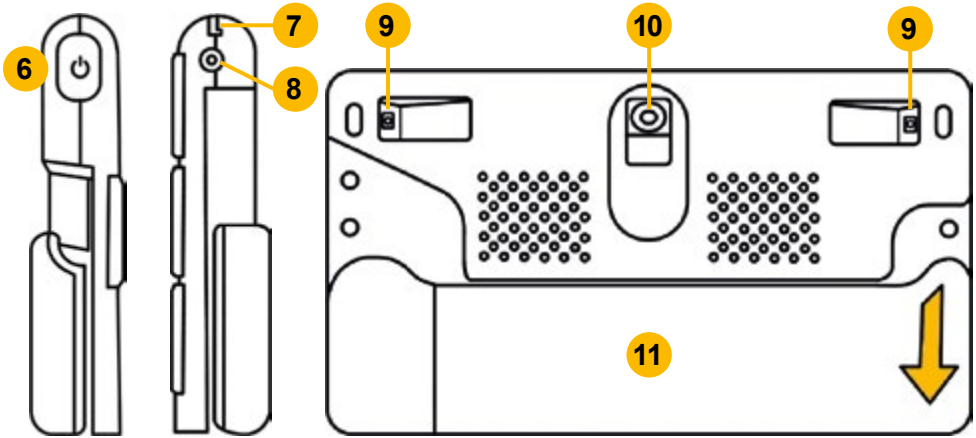

1) microSD card slot
2) color mode
3) zoom in (elevated knob)
4) freeze button
5) zoom out (recession tactile)
6) power button
7) fastening for hand strap
8) power port
9) LED lighting
10) camera
11) stand/handle

Turning ON/OFF



To switch ON MANO 6 either press and hold the power button for 2 seconds or unfold the stand.

Press and hold the power button for approx. 3 seconds until a menu appears. You can select to either put your system into standby mode or to turn it OFF. If you do not make any selection, the system turns after approx. 5 seconds automatically into standby mode.

Press the power button in combination with other buttons to set certain functions (e.g. lighting).

Menu

You can access the menu by briefly pressing the power button.

The following options are available::



Volume control bar (slider)



brightness control bar (slider)

 line marker/mask

 autofocus ON/OFF

 LED lighting
50% - 100% - OFF

 vibration ON/OFF

 energy saving mode ON/OFF

 open gallery

To exit the menu, press the power button again. The menu turns OFF automatically after 8 seconds of inactivity.

Magnification

On the right side, the buttons for magnification are located at the top and bottom. Press the zoom in button to increase the magnification and the zoom out button to decrease it. Press and hold the appropriate button to adjust the magnification continuously.

Alternatively, you can use the pinch and zoom gesture on the touch-screen to adjust the magnification.

Moving the magnified image

At a higher magnification level, you can navigate through the image using sliding movements on the touch screen. This allows you to read more comfortably without moving the paper or MANO 6.

Guidance in magnified image mode

Briefly double tab the center of the display to re-center the image.

Tap twice briefly on any edge of the display and the image will jump to the appropriate position to the left, the right, up or down of the original image.

Brightness



You can either chance the brightness of the screen within the menu or by pressing the button combination power button and zoom-in or zoom-out button simultaneously.

Color modes



Tap the color mode button to choose between the different screen colors:

True color mode

white on black

yellow on black

black on white

black on yellow

To switch to true color mode, press the power button and the color mode button simultaneously in artificial color mode.

To access the artificial color settings, press and hold the color mode button for about 3 seconds. There you can activate/deactivate the artificial color combinations by tapping on the icon.

The following colors can be activated:

white and blue

blue and yellow

green and black

black and magenta

black and blue

red and white

Press the power button to exit the settings.

LED lighting



The LED lighting can be used with 100% or 50% luminosity or switched off completely. You can make this setting via the menu or by pressing the power button and freeze image button simultaneously.

Freeze image



Press the freeze button to create a freeze image.
Press the button again to return to live mode.



To save an image, press and hold the freeze image button for 3 seconds until the saving icon appears.

Note: Approximately 2 GB of storage capacity is available. If an error message appears during saving, the memory is full and you must delete images from the gallery or transfer them to a mircoSD card.

When viewing a freeze image, you can change the magnification and color mode as described on page 27 ff.

Image gallery



Open the menu and tap on the gallery icon to open your stored images.

Use your finger to scroll through your stored pictures by moving the scroll bar. Tap twice on a picture to open it.

Alternatively, you can use the zoom in and zoom out button to scroll through the pictures and use the freeze image button to open the selected image.

If you tap longer on an image, a check mark appears in the lower right corner and you have the option to select multiple images and then delete them all at once or transfer them to a micoSD card.

When viewing saved images, you can change the magnification and color mode as described on page 27 ff. Press the freeze image button to return to the gallery.

Copy pictures to a microSD card



You have the possibility to copy stored pictures to a microSD card, e.g. to view or print them on a PC. Select one or more images and then press the card icon. If you have selected only one image, it will be copied automatically. If you have selected multiple images, a new window will appear where you can confirm or cancel the operation. If you want to copy all images from the gallery to the microSD card, press and hold the card icon for 3 seconds.

Inserting and removing a microSD card

Insert a microSD card into the slot on the top of the device with the contacts facing forward and press slightly until the card locks into place. You will hear a soft click and the card will only protrude from the device by about 1 mm. To remove the card, press it down slightly and release the card. You will hear another click and the card will protrude about 4 mm. Now the card can be removed easily.

Note: To avoid damage to the device, please make sure that the card protrudes approx. 4 mm out of the device before removing it and do not try to remove the card by force.

Delete saved images



Select one or more images and tap the delete icon. If you have only one image selected, you must press the delete icon a second time to delete it for good. Press the power button or anywhere else on the display to cancel deleting the image. If you have selected multiple images, a new window will appear where you can confirm or cancel the operation.

To delete all images in the gallery, press and hold the trash icon for approx. 5 seconds. A confirmation request for this deletion appears on screen. Press to confirm deletion or press any other button to cancel deletion process.

Line marker and mask



Change the position by swiping in the opposite direction of the marking. To change the size, swipe along the marking.

You can change the position of the horizontal line ruler, for example, by stroking up and down over the display. If you move your finger to the right or left, you can change the line width.

As long as the marker symbol is displayed on the screen, you can change the selected marker with your fingers. After pressing the power button for 8 seconds or twice, the icon disappears and you can adjust the image with your fingers as usual.

Autofocus



By default Autofocus is always active. To adjust autofocus manually, just press the display at the desired spot for approx. 2 seconds.

Refresh rate



By default refresh rate is set to 50Hz. In case the picture flickers constantly, it may help to adjust refresh rate to 60Hz by pressing the power button ad the color mode button simultaneously for approx. 3 seconds.

Memory

MANO 6 will memorize automatically the most recent settings, such as color mode, magnification, beep when power is OFF and recall them when the system is ON next time.

Energy saving mode



If no operation and no move for more than 5 minutes, MANO 6 will turn automatically into standby mode. After 10 minutes more, the system turns OFF automatically. You can deactivate this function within the internal menu.

Reset to default factory settings



Press and hold the freeze button and color mode button simultaneously for 3 seconds to reset the current settings to the factory defaults. After resetting, the unit turns OFF automatically.

Hardware reset



In case MANO 6 cannot be turned OFF or otherwise operated, press the power button + the freeze button + the zoom out button simultaneously, to restart the system.

Battery charging

Attention: A prerequisite for a long life battery life time is the correct operation and charging of the battery.

- Make sure the battery is fully charged before first use of the system
- For charging, connect the power adapter with the power port on the right side of the system and plug it into an AC outlet.
- If MANO 6 is not in use for a longer period of time, the battery discharges automatically. Always check charging status to avoid complete discharge which would damage the unit.

IV. Troubleshooting

The device cannot be switched ON

- Connect the power adapter and charge the battery

Black or white screen

- When the device is placed on a flat, clean surface with no structure, the screen may be black or white.
- Lift the device up to test if the image changes.
- Change magnification
- Change color mode
- Restart the device

The image does not change

- Check if the unit is in freeze mode
- Restart the device (see „Hardware reset“ on page 36)

Dirt or stains on the screen

- Adjusting brightness
- Cleaning the LCD screen and camera

V. Warranty information

1. Reinecker Vision GmbH grants a warranty of 24 months (warranty period only valid within the European Union) against defects in manufacture counted from date of invoice ex Reinecker Vision GmbH.
2. All parts that have been replaced when repairing the unit will automatically become property of Reinecker Vision GmbH.
3. Damage caused by improper use or by non-compliance with the operating instructions will result in the invalidation of the warranty.
4. Interventions from persons other than Reinecker Vision GmbH authorized specialists may lead to invalidity of warranty.
5. The liability for material defects does not include light sources serving to illuminate the reading object and other parts subject to wear and tear, e.g. rechargeable batteries.

6. If a warranty claim is necessary, the system has to be returned to the manufacturer in Alsbach-Hähnlein or to your authorized dealer in the original packaging including all components. The manufacturer does not carry the cost for transport, packaging and insurance. Prior to returning the system, a RMA number issued by Reinecker Vision is required. Please have the exact serial number of your system before hand.

Phone number: +49 6257 9311-0

View our General Terms and Conditions.

Your authorized distributor:

VI. Technical details

type	**MANO 6** (MANO6001/ MANO6001LV)
screen	touchscreen with approx. 14 cm screen diagonal
screen resolution	1920 x 1080 pixel
camera	13 megapixels with autofocus
magnification	approx. x2 to x35
color modes	true color, up to 16 artificial colors adjustable
freeze image and gallery	freeze image function, approx. 2 GB storage capacity for saved images
measurements	WxHxD approx. 16x9.1x2.1 cm / 6.3x3.6x0,8 inch
weight	approx. 274 g / 9.7 oz
operating time	up to approx. 3 hours
charging time	up to approx. 2.5 hours
power adapter	Input: 110-240V; Output: 5V/3A

Manufacturer / *Hersteller*

Reinecker Vision GmbH
sales department, customer relations:
Vertrieb, Kundenberatung:
Sandwiesenstraße 19
DE-64665 Alsbach-Hähnlein

customer service:
Kundendienst:
Erlenweg 3
64665 Alsbach-Hähnlein

Tel.: 06257 9311-0
Fax: 06257 9311-8008

E-Mail: info@reineckervision.de
www.reineckervision.com

SRN: DE-MF-000025998

Version 2.1, as of 04/24, item no. 000 10 227
Subject to change.

In case service is necessary, please contact your authorized distributor.

Bitte wenden Sie sich bei Fragen oder einem Servicefall direkt an unser Hauptwerk in Alsbach-Hähnlein.

Bei im Ausland erworbenen Produkten kontaktieren Sie im Servicefall bitte Ihren dort ansässigen Händler.

REINECKER