User manual

MANO 5

EN



Please read this user manual carefully prior to installation, use and maintenance for your own safety and in order to avoid damages on your system.

REINECKER

Content

I. General Information 5
I.I General Information – valid for MANO5002 10
I.II General Information – valid for MANO5002LV 16
II. Safety instructions 18
III. Instructions 20
1. Scope of supply 20
2. Commissioning 20
Battery installation 20
Charging the battery 21
Battery handling 22
Power indicator 23
Writing stand 24
Attaching the foldable handle 25

3. Operation 26
Compositions 26
Turning ON/OFF 29
Acoustic signals 30
Magnification 30
Color modes 31
Brightness 33
Contrast adjustment (artificial color mode) 34
LED lighting ON/OFF 34
Freeze image 34
Memory 36
Energy saving mode 36
Reset to default factory settings 37
IV. Troubleshooting 38
V. Warranty information 40
VI. Technical details 42

I. General Information

Important notes on the operation of MANO 5!

Please read them carefully prior to the operation of the device!

Notes on the electromagnetic compatibility (EMC)

MANO 5 is suited for the use in all set-ups including the domicile that are connected directly to a public power supply for buildings with residential purposes.
MANO 5 is designed for the use in the indicated electromagnetic environment. The user should ensure the use in the indicated environment.
MANO 5 operates on HF-Energy exclusively for its own function. Therefore the emitted interference of high frequency disturbances is very low and the interference with other appliances operated close-by is improbable. When operating the system simultaneously with other systems, however, the possibility of disturbances of the system or other systems should not be neglected.

For this reason it should be ensured that the system is not placed directly beside or on top of another system. If the set-up of this system in the proximity of medical, measuring devices cannot be avoided, the operator of these devices has to be informed that it is necessary to observe the performance of the system to control the conventional use of the system in the chosen set-up.
Electronic devices are sensitive towards electric discharge and towards high frequency electromagnetic fields.

Attention: In order to avoid high frequency disturbances (e.g. microwaves) the operator should respect a minimum distance of one meter/three feet to portable and mobile HF-telecommunication devices.
Please also see chapter „Safety advice“ on page 12 or on page 16.

Storage of the user manual
The user manual is an essential part of the system. Please keep the manual in a safe place for future reference.

Product description

MANO 5 is a system to magnify text and images with the following benefits:

- 5” LCD display (approx. 12.9 cm diagonal) with true color and up to 20 artificial color modes
- continuous magnification of approx. 4x to 20x
- ergonomic design with fold-out stand and optionally attachable handle, compact and easy to use
- the low weight of 195 g allows comfortable handling at home or on the go

Cleaning of the system

Before cleaning, disconnect the unit from the power supply.
Clean the device with a mild household cleaner and a microfiber cloth.
Do not allow any liquids to enter the device.

Special advice for transport and storage

For safety reasons, the unit must only be shipped in the original packing. The unit must be stored in dry and closed rooms in the original packing. The following conditions for transport and storage have to be respected:

- Air pressure 700 to 1000 hPa
- Temperature range + 5 °C to + 50 °C
- Relative humidity 30% to 80%

Important note on reading, capturing and playback of medication leaflets

Dosage and quantity information from medication leaflets, read from the screen or, if a read-aloud function in your system is available, played back, must always be checked and reconfirmed independently! Always ask your doctor, pharmacist or a person you trust about dosing of medications!

Power supply

Only use the original power supply which is included in the delivery by Reinecker Vision GmbH.

Caution: The use of any other power supply besides the original, might lead to an increased electromagnetic emission and to product damage.

Disposal or transfer of the device

This equipment may retain user settings and stored images if disposed of or transferred. Prior to disposing or transferring MANO 5, remove all personal content from the device, as described in „Reset to default factory settings“ on page 36.

I.I General Information – valid for MANO5002

The order code of your device can be found on the type label on the device or on the packaging.

Purpose

This electronic magnifier with voice output is a medical device to assist with the reading and magnifying of printed text and pictures. Visually impaired people can compensate for their loss of visual acuity by using this device.

Medical device

This device is classified as a medical device, class I according to (EU) 2017/745, Annexe VIII, standard 13. For the distribution to countries outside the EU the respective country-specific guidelines have to be regarded.

Declaration of conformity, CE mark

CE

You can request a copy of the declaration of conformity in written form from Reinecker Vision GmbH, Sandwiesenstr. 19, 64665 Alsbach-Hähnlein or view it at www.reineckervision.de/en/eu-doc

Evolution and lifetime of products

The Medical Device Directive regulates by law that manufacturers of medical devices shall determine a period of safety operation of a product. We fulfill hereby legal requirements and determine - for formal reasons - a period of three years after date of first purchase.

Note: The mentioned life span does not reflect the complete life span of the system. It is rather an indication on when the product might be obsolete and substitution might be recommended due to new product developments.

Combination with other medical devices

If the operator/user wants to operate this device in conjunction with other life sustaining medical devices, please get in touch with Reinecker Vision GmbH or with your local dealer, prior to operation.

Safety advice

The device has to be set up and operated in closed and dry rooms only. Do not plug the device into an electrical circuit that is also being used for any life sustaining or support systems. The device may not be used in the patients environment.

This device should not be operated in explosion-endangered environments. This device should only be installed in conjunction with a state-of-the-art electrical circuit.

Precautions by alteration of the performance of the device

Should any of the technical features or performances change (failure, malfunction etc.), the device must be turned OFF and the battery must be taken out. **Please do not switch ON the device again.** Refer directly to your authorized dealer or to Reinecker Vision GmbH Service Center.

Reinstatement, installation and maintenance

This device may be technically repaired and reconditioned by Reinecker Vision GmbH only or by an authorized technician. The device may only be used again after a safety check, thorough cleaning and disinfection.

Environmentally friendly disposal (Directive 2012/19/EU)



MD

Within the EU the respective national implementations of the Directive 2012/19/EU for the sustainable re-use and proper recycling of electrical and electronic equipment applies.
For countries outside the EU (e.g. Switzerland), the respective national implementations for the regulatory requirements for environmentally friendly disposal and recycling applies.

List of symbols used

	Manufacturer		Country of manufacture
	Model number		Catalogue number
	Serial number		Caution
	Medical device		Unique Device Identifier
	Consult instructions for use		Temperature limit

I.II General Information – valid for MANO5002LV

The order code of your device can be found on the type label on the device or on the packaging.

Purpose

MANO 5 is a system for magnifying text and pictures.

Declaration of Conformity (DoC), CE/FCC mark

You can request a copy of the declaration of conformity in written form from Reinecker Vision GmbH, Sandwiesenstr. 19, 64665 Alsbach-Hähnlein or view it at www.reineckervision.de/en/int-doc

Safety advice

The device may only be set up and operated in closed and dry rooms. The device should not be operated in explosion-endangered environments. The device may only be connected to a state-of-the-art circuit.

Repair and maintenance

The device may only be serviced and repaired by Reinecker Vision GmbH or an authorized dealer.

Environmentally friendly disposal



The device contains electronic components.
To avoid environmental damage, the respective country-specific laws and regulations for the disposal of the device must be respected.

II. Safety instructions

Please respect the following safety instructions:

1. Do not plug the AC adapter into a faulty electrical outlet. Doing so may cause electrical shock or fire.
2. Do not touch the AC adapter with wet hands.
3. Only use the original power supply which is included in the delivery by Reinecker Vision GmbH. The use of any other equipment might lead to a product damage.
4. If the system is equipped with batteries, only original parts from Reinecker Vision GmbH should be used for replacement.
5. Do not expose the system to direct sunlight or extreme heat or cold temperatures, as this would harm the picture quality.
6. Do not operate this device below +10°C or above +35°C.
7. Keep liquids away from the system. Only operate the device in a dry environment.
8. The device should not be operated next to medical devices (patients environment).

9. Do not press or drag objects across the touch display. Do not lean on the screen or lay heavy objects on the device. This may cause damage to the device.
10. Do not try to repair or to dismantle the system on your own. That would immediately void the warranty. If you need any technical assistance please contact your distributor or Reinecker Vision GmbH.
11. Always turn the system OFF and disconnect it from the power supply before cleaning it. Only use a soft and slightly damped cloth. Only use a mild household detergent. Do not use alcohol containing or strong detergents

III. Instructions

1. Scope of supply

- MANO 5
- Li-Ion battery
- battery cover
- battery cover with handle
- carrying case
- charging cable with power adapters
- microfiber cloth
- quick start guide
- user manual

2. Commissioning

Battery installation

Turn the unit to make the back face up.
Press the arrow icon on the battery cover and slide outward to open the battery cover.
Insert the battery to the right position in the battery slot.
Replace and slide back the battery cover.

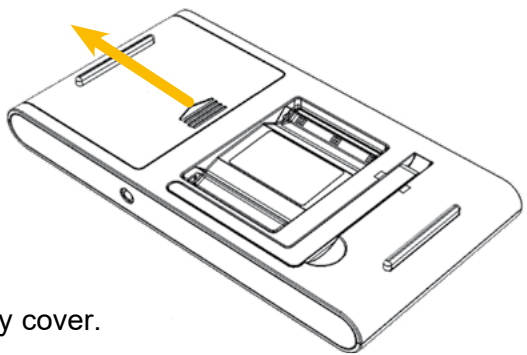

Charging the battery

Before using the device for the first time, you must fully charge the battery. Connect the supplied charging cable to the power adapter and connect the supplied cable to the power port on the unit. Plug the power adapter into an AC outlet and start charging MANO 5.

Caution: The AC adapter supplied with the unit is designed to operate this system only. Do not use any other AC adapter.

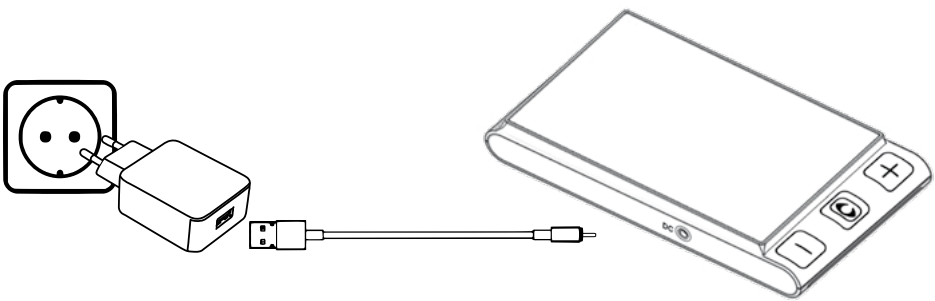

Battery handling

Attention: A prerequisite for a long life battery life time is the correct operation and charging of the battery.

- Make sure the battery is fully charged before first use of the system
- For charging, connect the power adapter with the power port on the bottom of the system and plug it into an AC outlet.
- If MANO 5 is not in use for a longer period of time, the battery discharges automatically. Always check charging status to avoid complete discharge which would damage the unit.

Power indicator

The symbol of the power indicator lights up in different colors, which can be used to indicate different charging states:

Device switched OFF, power supply connected:

- Green power indicator: device is charging
- Power indicator OFF: device is fully charged

Device switched ON:

- Green power indicator:
  sufficient battery charge or power supply connected
- Red power indicator: battery almost empty, device needs to be charged
- Red power indicator flashing: device needs to be charged immediately

A full charge takes about 3 hours and will allow the unit to work for about 3 to 3.5 hours (depending on the operation mode).

The battery status can be checked by briefly pressing the power button. The displayed information will disappear automatically after a few seconds.

Writing stand

Open the writing stand as the following figure shows. And you can write under the camera.

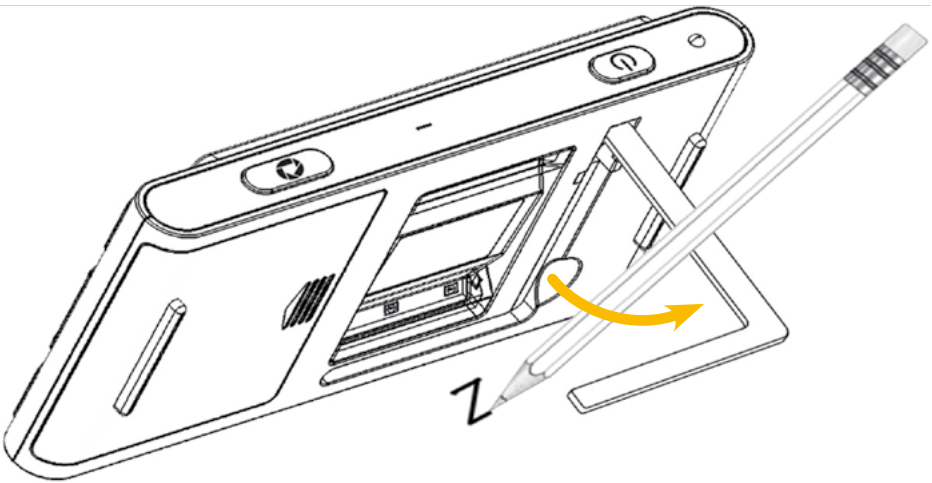

Attaching the foldable handle

A foldable handle can be attached to the rear by replacing the battery cover. To do this, remove the battery cover as described on page 20. Unfold the cover with handle and slide it back until it clicks into place.

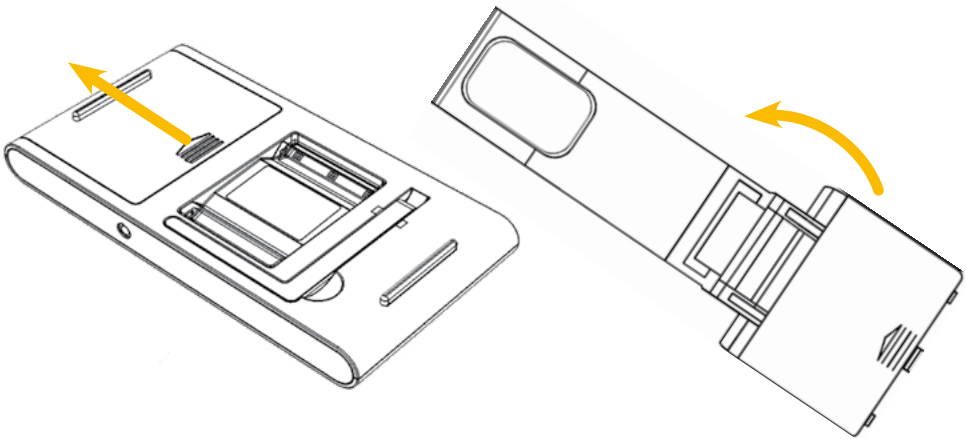

3. Operation

Compositions

Front

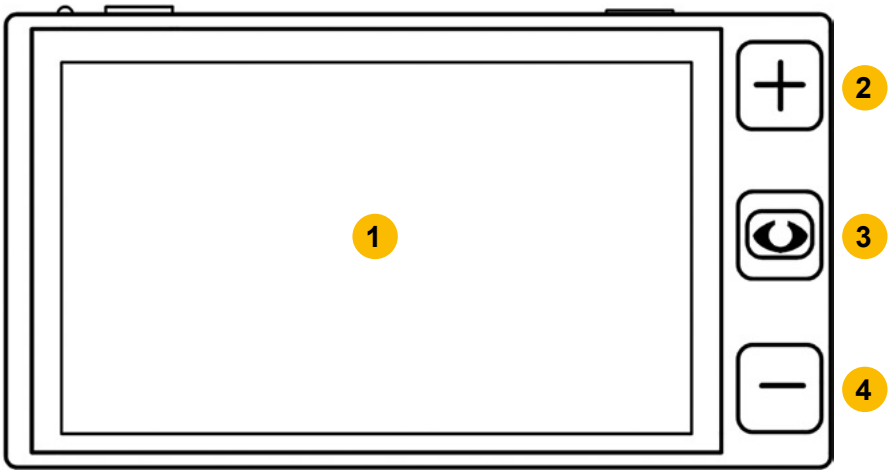

Top

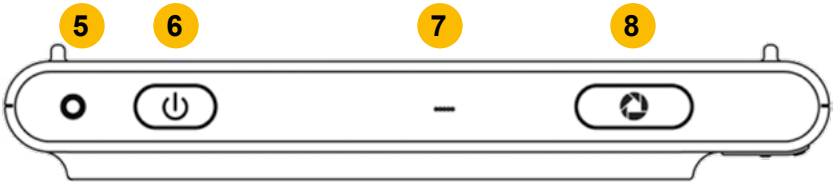

Bottom

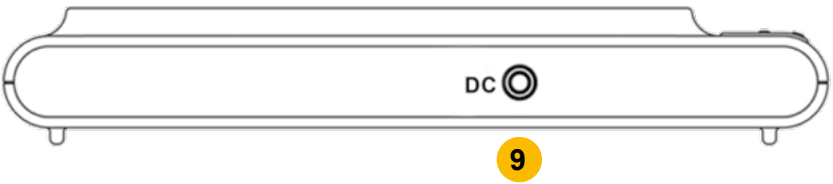

1) LCD display screen
2) zoom in (elevated dot)
3) color mode
4) zoom out (tactile indentation)
5) status LED
6) ON/OFF button
7) loudspeaker
8) freeze image
9) power port

Back

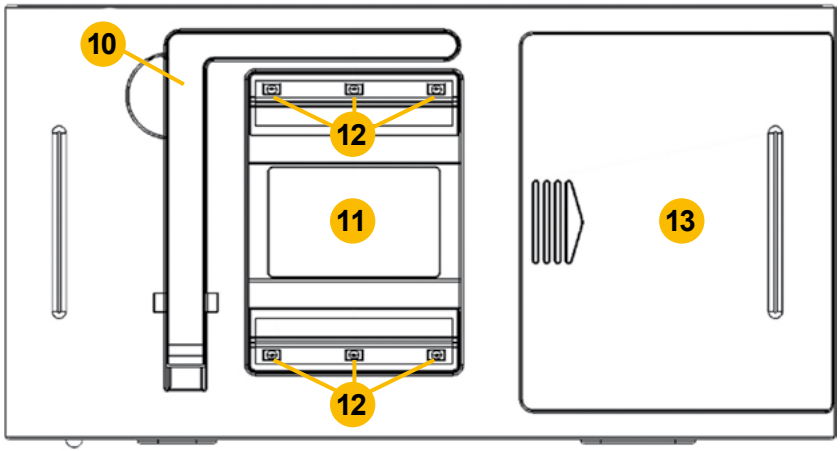

10) stand
11) camera
12) LED lighting
13) battery compartment

Turning ON/OFF



To turn ON MANO 5 press and hold the power button for approx. 3 seconds.

Press and hold the power button for approx. 3 seconds to turn OFF the device.

Briefly press the power button to view the status of the battery, color mode, freeze/live image, and the acoustic signals.

Press the power button in combination with other buttons to set certain functions (e.g. contrast).

Acoustic signals

If this function is active, you will hear an acoustic signal for the following status messages:

- Device ON/OFF
- Pressing any button
- Threshold reached
- Battery low



Press and hold the freeze button for approx. 3 seconds to turn ON/OFF the acoustic signals.

Magnification



Press the zoom in button to increase the magnification and the zoom out button to decrease it. Press and hold one of the zoom buttons to adjust the magnification continuously.

Color modes

A color mode is a pre-defined color combination. Full color mode is suitable for viewing pictures or maps. Artificial color mode is a combination of contrasting foreground and background colors and can help to read more clearly.



Tap the color mode button to cycle between the different color modes. In the artificial color mode, you can return to the true color mode by pressing and holding the color mode button.
There are three different artificial color combination lists available. You can switch between them by long pressing the color mode button in true color mode.

The following color combinations are available in the different artificial color combination lists:



Simplified:

true color mode

 white on black

 black on white



Standard (default setting):

true color mode

 white on black

 black on white

 yellow on black

 black on yellow

Extended:

true color mode

- white and black
- white and blue
- green and black
- black and blue
- red and white
- black and yellow
- blue and yellow
- black and violet
- green and white
- red and black

Brightness

Set the display brightness for full color mode and artificial color mode. The factory default value is highlighted in green.

power button and zoom in button:
increase brightness

power button and zoom out button:
decrease brightness

Contrast adjustment (artificial color mode)



Fine-tuning the combination of foreground and background color in an artificial color mode improves the image quality of different materials. The factory default value is highlighted in green. Press the power button and the color mode button simultaneously to change the contrast.

LED lighting ON/OFF



The LED illumination can be turned ON and OFF by pressing the power button and the freeze button simultaneously.

Freeze image



Freezing an image on the LCD screen can be useful for further reading, and also further zooming in or zooming out or changing the color mode for a better view. The brightness can't be adjusted in a freeze image.

Press the freeze button to lock the active image.

Press the freeze button again to release it.

You can move the magnified image as follows:

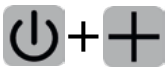

power button and zoom + button:
move image to the right or up

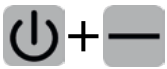

power button and zoom - button:
move image to the left or down



If you want to switch from the horizontal direction of movement to the vertical direction, briefly press both the power and the color mode button.

While moving and zooming in/out, you can see an overview at the top left of the screen that shows you where you are currently located in the original image.

Memory

MANO 5 will memorize automatically the most recent settings, such as color mode, magnification, acoustic signals when power is OFF and recall them when the system is ON next time.

Energy saving mode



If this function is activated, the unit will automatically turn OFF if there is no operation or movement for more than 3 minutes. Long press the power button and the color mode button simultaneously to turn this function ON or OFF.

Reset to default factory settings



Press and hold the freeze button and zoom out button simultaneously for approx. 3 seconds to reset the current settings to the factory defaults. After resetting, the unit turns OFF automatically.

IV. Troubleshooting

The device cannot be switched ON

- Connect the power adapter and charge the battery
- Check if the battery is inserted

The device cannot be switched OFF

- Remove the battery and re-insert it

Black or white screen

- When the device is placed on a flat, clean surface with no structure, the screen may be black or white. Lift the device up to test if the image changes.
- Change magnification
- Change color mode
- Restart the device

The image does not change

- Check if the unit is in freeze mode
- Press the power button to check the current status
- Switch the device OFF and ON again

Dirt or stains on the screen

- Adjusting brightness
- Cleaning the LCD screen and camera

V. Warranty information

1. Reinecker Vision GmbH grants a warranty of 24 months (warranty period only valid within the European Union) against defects in manufacture counted from date of invoice ex Reinecker Vision GmbH.
2. All parts that have been replaced when repairing the unit will automatically become property of Reinecker Vision GmbH.
3. Damage caused by improper use or by non-compliance with the operating instructions will result in the invalidation of the warranty.
4. Interventions from persons other than Reinecker Vision GmbH authorized specialists may lead to invalidity of warranty.
5. The liability for material defects does not include light sources serving to illuminate the reading object and other parts subject to wear and tear, e.g. rechargeable batteries.

6. If a warranty claim is necessary, the system has to be returned to the manufacturer in Alsbach-Hähnlein or to your authorized dealer in the original packaging including all components. The manufacturer does not carry the cost for transport, packaging and insurance. Prior to returning the system, a RMA number issued by Reinecker Vision is required. Please have the exact serial number of your system before hand.

Phone number: +49 6257 9311-0

View our General Terms and Conditions.

Your authorized distributor:

VI. Technical details

type	**MANO 5** (MANO5002/ MANO5002LV)
screen	5" LCD display with approx. 12,7 cm screen diagonal
magnification	approx. x4 to x20
color modes	true color, up to 19 artificial colors adjustable
freeze image	freeze image function,
measurements	WxHxD approx. 15.2 x 8 x 2.2 cm / 6 x 3.1 x 0,9 inch
weight	approx. 195 g / 6.9 oz
operating time	up to approx. 3 to 3.5 hours
charging time	up to approx. 3 hours
power adapter	Input: 110-240V; Output: 5V/1A

Manufacturer / *Hersteller*

Reinecker Vision GmbH
sales department, customer relations:
Vertrieb, Kundenberatung:
Sandwiesenstraße 19
DE-64665 Alsbach-Hähnlein

customer service:
Kundendienst:
Erlenweg 3
64665 Alsbach-Hähnlein

Tel.: 06257 9311-0
Fax: 06257 9311-8008

E-Mail: info@reineckervision.de
www.reineckervision.com

SRN: DE-MF-000025998

Version 2.2, as of 01/25, item no. 000 10 288
Subject to change.

In case service is necessary, please contact your authorized distributor.

Bitte wenden Sie sich bei Fragen oder einem Servicefall direkt an unser Hauptwerk in Alsbach-Hähnlein.

Bei im Ausland erworbenen Produkten kontaktieren Sie im Servicefall bitte Ihren dort ansässigen Händler.

REINECKER