User manual

MANO 16

EN



Please read this user manual carefully prior to installation, use and maintenance for your own safety and in order to avoid damages on your system.

REINECKER

Content

I. General Information 5
I.I General Information – valid for MANO1601 6
I.II General Information – valid for MANO1601LV 8
II. Safety instructions 9
III. Instructions 10
Scope of supply 10
Accessories (optional) 10
Commissioning 10
Charging the battery 10
Power indicator 10
Setting up MANO 16 10
Unfolding MANO 16 11
Attaching the anti-glare shield 12
Description of the controls 13
Operation 14
Turning ON/OFF 14
Home/menu button 14
Zoom 14
Color mode 15
Orientation aids in the magnified image 15
Image position 15
Line ruler and line mask 15
Overview mode 15
Live Panning 16
The menu bar in zoom mode 16
Lighting 16
Brightness 16
Adjusting the contrast (in semi color mode) 16
Volume 16
Freeze frame function 17
Save freeze image 17
Autofocus 17
The main menu 18
Open and copy document / picture 18
Manage files on the device 18
Copy files from an SD card/USB stick to the device 19
Copy saved images to an SD card/USB stick 19
Multiple selection 19
Delete all files from the device 19
Deleting files from a folder 19
Open and view pictures 20
Open and view documents 20

Settings....21
Options page....21
Individual color combinations....21
Voice label....21
Power saving (standby mode)....21
Touch Screen....21
Keystone Correction....21
Speech guide....21
Language settings....21
Male / female voice selection....21
Language selection....21
Device information....21
Reset to factory settings....21
Frequency....22
User Interface....22
Information about the system....22
Hardware reset....22
Handling of the battery....22
IV. Troubleshooting....23
V. Warranty information....24
VI. Technical details....25

I. General Information

Important notes on the operation of MANO 16!

Please read them carefully prior to the operation of the device!

Notes on the electromagnetic compatibility (EMC)

MANO 16 is suited for the use in all set-ups including the domicile that are connected directly to a public power supply for buildings with residential purposes.

MANO 16 is designed for the use in the indicated electromagnetic environment. The user should ensure the use in the indicated environment.

MANO 16 operates on HF-Energy exclusively for its own function. Therefore the emitted interference of high frequency disturbances is very low and the interference with other appliances operated close-by is improbable. When operating the system simultaneously with other systems, however, the possibility of disturbances of the system or other systems should not be neglected.

For this reason it should be ensured that the system is not placed directly beside or on top of another system. If the set-up of this system in the proximity of medical, measuring devices cannot be avoided, the operator of these devices has to be informed that it is necessary to observe the performance of the system to control the conventional use of the system in the chosen set-up.

Electronic devices are sensitive towards electric discharge and towards high frequency electromagnetic fields.

Attention:
In order to avoid high frequency disturbances (e.g. microwaves) the operator should respect a minimum distance of one meter/three feet to portable and mobile HF-telecommunication devices.

Please also see chapter „Safety advice“ on page 7 or on page 8.

Storage of the user manual

The user manual is an essential part of the system. Please keep the manual in a safe place for future reference.

Product description

MANO 16 is an electronic magnifier for enlarging text and images and for converting.

- the FullHD 15.6" (approx. 39.5 cm) touch display on a tiltable stand offers an extremely sharp and high-contrast display
- approx. 1.4x to 54x, continuous magnification thanks to the innovative and state of the art camera technology
- easy to fold with a practical handle

Cleaning of the system

- Before cleaning, disconnect the unit from the power supply.
- Clean the device with a mild household cleaner and a microfiber cloth.
- Do not allow any liquids to enter the device.

Special advice for transport and storage

For safety reasons, the unit must only be shipped in the original packing. The unit must be stored in dry and closed rooms in the original packing.

The following conditions for transport and storage have to be respected:

- Air pressure 700 to 1000 hPa
- Temperature range + 5 °C to + 50 °C
- Relative humidity 30% to 80%

Important note on reading, capturing and playback of medication leaflets

Dosage and quantity information from medication leaflets, read from the screen or, if a read-aloud function in your system is available, played back, must always be checked and re-confirmed independently! Always ask your doctor, pharmacist or a person you trust about dosing of medications!

Power supply

Only use the original power supply which is included in the delivery by Reinecker Vision GmbH.

Caution: The use of any other power supply besides the original, might lead to an increased electro-magnetic emission and to product damage.

Disposal or transfer of the device

This equipment may retain user settings and stored images if disposed of or transferred. As described on page 21, go to the device information in the settings and then to “Reset to factory settings” to remove all user settings. To remove all personal content from the device, follow the procedure in “Deleting all files from the device” on page 31.

I.I General Information – valid for MANO1601

The order code of your device can be found on the type label on the device or on the packaging.

Purpose

This electronic magnifier is a medical device to assist with the reading and magnifying of printed text and pictures. Visually impaired people can compensate for their loss of visual acuity by using this device.

Medical device

This device is classified as a medical device, class I according to (EU) 2017/745, Annexe VIII, standard 13. For the distribution to countries outside the EU the respective country-specific guidelines have to be regarded.

Declaration of conformity, CE mark

CE You can request a copy of the declaration of conformity in written form from Reinecker Vision GmbH, Sandwiesenstr. 19, 64665 Alsbach-Hähnlein or view it at www.reineckervision.de/eu-doc

Evolution and lifetime of products

The Medical Device Directive regulates by law that manufacturers of medical devices shall determine a period of safety operation of a product. We fulfill hereby legal requirements and determine - for formal reasons - a period of three years after date of first purchase.

Note: The mentioned life span does not reflect the complete life span of the system. It is rather an indication on when the product might be obsolete and substitution might be recommended due to new product developments.

Combination with other medical devices

If the operator/user wants to operate this device in conjunction with other life sustaining medical devices, please get in touch with Reinecker Vision GmbH or with your local dealer, prior to operation.

Safety advice

The device has to be set up and operated in closed and dry rooms only. Do not plug the device into an electrical circuit that is also being used for any life sustaining or support systems. The device may not be used in the patients environment.

This device should not be operated in explosion-endangered environments. This device should only be installed in conjunction with a state-of-the-art electrical circuit.

Precautions by alteration of the performance of the device

Should any of the technical features or performances change (failure, malfunction etc.), the device must be turned OFF and the battery must be taken out. **Please do not switch ON the device again.** Refer directly to your authorized dealer or to Reinecker Vision GmbH Service Center.

Reinstatement, installation and maintenance

This device may be technically repaired and reconditioned by Reinecker Vision GmbH only or by an authorized technician. The device may only be used again after a safety check, thorough cleaning and disinfection.

Environmentally friendly disposal (Directive 2012/19/EU)



Within the EU the respective national implementations of the Directive 2012/19/EU for the sustainable re-use and proper recycling of electrical and electronic equipment applies.

MD For countries outside the EU (e.g. Switzerland), the respective national implementations for the regulatory requirements for environmentally friendly disposal and recycling applies.

List of symbols used

	Manufacturer		Country of manufacture
	Model number		Catalogue Number
	Serial number		Caution
	Medical device		Unique Device Identifier
	Consult instructions for use		Temperature limit

I.II General Information – valid for MANO1601LV

The order code of your device can be found on the type label on the device or on the packaging.

Purpose

MANO 16 is a system for magnifying text and pictures.

Declaration of Conformity (DoC), CE/FCC mark



You can request a copy of the declaration of conformity in written form from Reinecker Vision GmbH, Sandwiesenstr. 19, 64665 Alsbach-Hähnlein or view it at www.reineckervision.de/int-doc



Safety advice

The device may only be set up and operated in closed and dry rooms. The device should not be operated in explosion-endangered environments.The device may only be connected to a state-of-the-art circuit.

Repair and maintenance

The device may only be serviced and repaired by Reinecker Vision GmbH or an authorized dealer.

Environmentally friendly disposal



The device contains electronic components.
To avoid environmental damage, the respective country-specific laws and regulations for the disposal of the device must be respected.

II. Safety instructions

Please respect the following safety instructions:

1. Do not plug the AC adapter into a faulty electrical outlet. Doing so may cause electrical shock or fire.
2. Do not touch the AC adapter with wet hands.
3. Only use the original power supply which is included in the delivery by Reinecker Vision GmbH. The use of any other equipment might lead to a product damage.
4. If the system is equipped with batteries, only original parts from Reinecker Vision GmbH should be used for replacement.
5. Do not expose the system to direct sunlight or extreme heat or cold temperatures, as this would harm the picture quality.
6. Do not operate this device below +10°C or above +35°C.
7. Keep liquids away from the system. Only operate the device in a dry environment.
8. The device should not be operated next to medical devices (patients environment).
9. Do not press or drag objects across the touch display. Do not lean on the screen or lay heavy objects on the device. This may cause damage to the device.
10. Do not try to repair or to dismantle the system on your own. That would immediately void the warranty. If you need any technical assistance please contact your distributor or Reinecker Vision GmbH.
11. Always turn the system OFF and disconnect it from the power supply before cleaning it. Only use a soft and slightly damped cloth. Only use a mild household detergent. Do not use alcohol containing or strong detergents.

III. Instructions

Scope of supply

- MANO 16
- carrying bag
- anti-glare shield
- cleaning cloth
- power supply with adapters
- quick reference guide
- user manual

Accessories (optional)

- spare battery
- battery charging station

Commissioning

Before using the device for the first time, you must fully charge the battery.

Charging the battery

Connect the supplied power cable to the charging socket on the device, then connect the power adapter to a mains socket to start the charging process. A complete charging process takes approx. 3 hours and enables an operating time of up to approx. 5.5 hours (depending on the operating mode).

For more information, see „Handling of the battery“ on page 22 .

Caution: The AC adapter supplied with the unit is designed to operate this system only. Do not use any other AC adapter.

Power indicator

The symbol of the power button lights up in different colors, which can be used to indicate different charging states. The following status indicators are available:

Device switched OFF, power supply connected:

- Green power indicator: device is charging
- Power indicator OFF: device is fully charged

Device switched ON:

- Green power indicator: sufficient battery charge or power supply connected
- Red power indicator: battery almost empty, device needs to be charged
- Yellow power indicator: device is in standby

If the device is switched ON, you can see the battery level on the display by briefly pressing the power button.

Setting up MANO 16

MANO 16 has a stand that holds the display in a comfortable reading position. There is a carrying handle on the housing for safe transportation.
Note: Carefully remove the device from the packaging and place it on a stable surface with sufficient space.

Unfolding MANO 16

Place the transportable video magnifier on a stable surface and hold the base plate firmly with one hand. Use your other hand to pull up the handle to move the display upwards.

Keep pressing the tray and unfold the arms to a suitable angle.





Unfold the display panel to a comfortable reading height.





If you wish, you can tilt the screen upwards to further adjust the reading position.





Attaching the anti-glare shield

Depending on the ambient light, distracting reflections on your reading material can make reading difficult. In this case, you can attach the anti-glare shield to the back of the stand. Peel the sticker cover off the back of the shield and stick it to the back of the device as shown in the images (images show a MANO EDU model with distance camera).





Note: The anti-glare shield can be easily removed from the device and reattached if necessary.

Please keep the sticker cover and use it to cover the sticker when you remove the anti-glare shield. If the adhesive strength decreases due to dust or other dirt, you can carefully clean the adhesive points with water.

Description of the controls

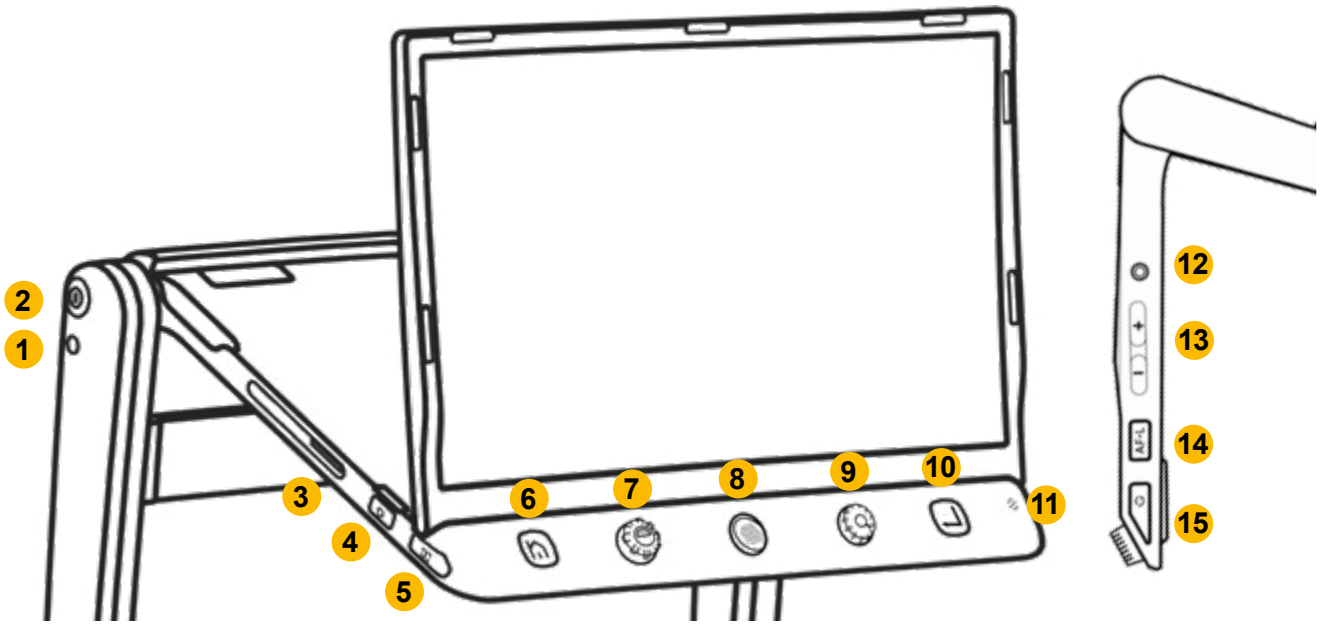

1) DC port
2) ON/OFF
3) SD card slot
4) gallery
5) line/mask button
6) home
7) color mode
8) joystick
9) zoom
10) enter
11) microphone
12) headphone / loudspeaker socket
13) volume +/-
14) autofocus
15) freeze frame

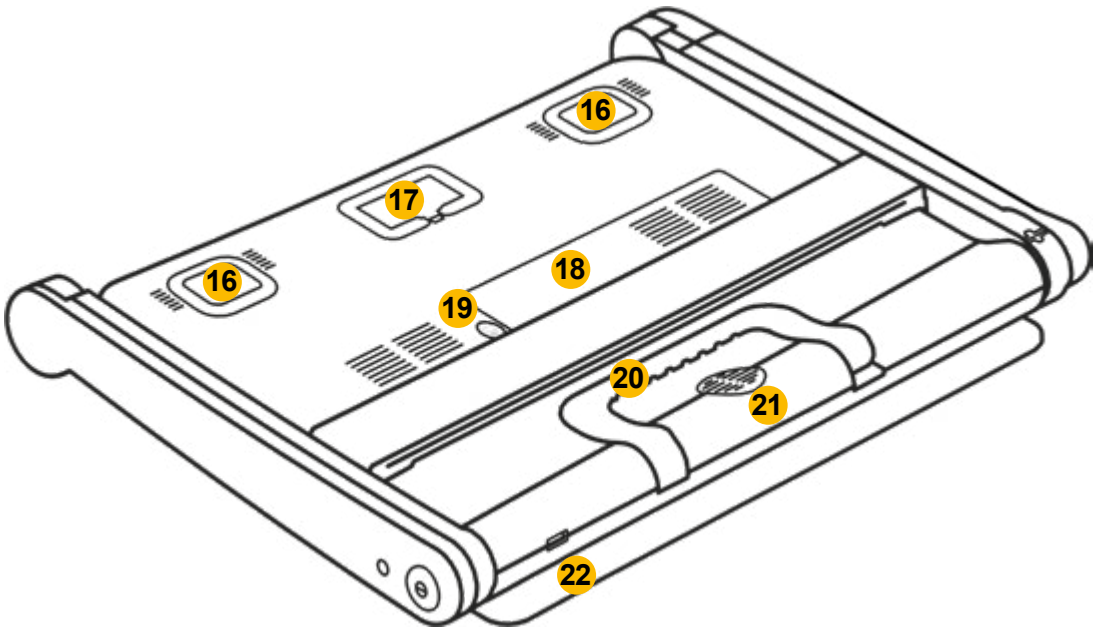

16) LED lighting
17) camera
18) replaceable battery
19) battery lock
20) handle
21) speakers
22) USB port

Operation



MANO 16 can be operated by the use of buttons and by the use of the touch screen monitor. Menu items on the screen can be selected either by tapping on the item on the touch screen or by using the joystick. In case you have selected the symbol with the joystick, press the enter button to confirm your selection.

Note: The touch screen function can be turned ON or OFF in the settings (see page 21).

Turning ON/OFF



Press and hold the ON/OFF button for 3 seconds to turn on MANO 16.

When the unit is ON, press the ON/OFF button to check the current status of the battery capacity.

When the unit is ON, press and hold the ON/OFF button to turn OFF MANO 16. A menu appears in which you can choose to either switch MANO 16 to standby mode or to turn it OFF. No operation for 3 seconds will automatically switch to the highlighted mode.

Home/menu button



If you press the home button for approx. 2 seconds, you will get to the main menu in which you can select the following functions:

- Magnifier
- Open document / picture
- Settings

The selected item is highlighted and you can tap on the desired icon on the touchscreen (or use the joystick to select and the enter button to confirm).

Briefly press the home button to display the menu bar at the bottom of the screen when you are in magnification mode. You can also open the menu bar by sliding your finger up over the display from the bottom of the screen.

If you do not perform any operation for 10 seconds or briefly press the home button, the menu bar will be closed.

Note: In menus you can go back or close the menu with the home button.

Zoom



Turn the zoom button clockwise to zoom in and counterclockwise to zoom out.



Alternatively, you can adjust the magnification with two fingers on the touchscreen by moving your fingers apart (zoom in) or towards each other (zoom out).

Move the magnified image

At higher magnification levels you can navigate through the image by sliding your finger over the touchscreen or moving the joystick. This enables you to read comfortably without having to move the reading material under the device.

Color mode



Full color mode is suitable for displaying pictures or maps. In semi color mode (a combination of foreground and background color), texts can be read with high contrast.

Rotate the color mode button to cycle through all activated semi color combinations. Press the color mode button to quickly switch between true color mode and the last selected semi color.

You can access the semi color settings by holding down the color mode button for approx. 5 seconds. There you can activate/deactivate the semi color combinations by tapping (or use the joystick to select and the enter button to confirm).

The following semi color combinations are available:

 White and black

 White and blue

 Green and black

 Black and blue

 Yellow and black

 Blue and yellow

 Black and magenta

 White on Red

 Red on black

Tap the exit icon to exit the custom colors page (or press the home button).

Note: The custom colors page can also be accessed from the settings menu.

Orientation aids in the magnified image

Image position

Double tap the center of the image to re-center the image (or push the joystick in any direction and press the zoom in button at the same time).

Double-tap the at edge of the display to jump to the end of the original image (or press the joystick twice quickly in the desired direction).

Line ruler and line mask



Press the orientation aids button on the left to toggle between the different modes for line ruler and line mask.

You can change the color of the line ruler by holding down the orientation aids button and rotating the color mode button.

Hold down the orientation aids button and move the joystick to change the size and position of the line ruler and line mask.

Overview mode



When you are at a higher zoom level, briefly press the magnification button to see the original-sized image. A yellow box marks the section of the magnified image. Use the joystick or a finger on the display to move the position of the box.

If you want to return to the previous position, turn the magnification button in any direction. To center the magnified image section, move and hold the joystick in any direction and press the zoom button.

Briefly press the magnification button again (or double-tap the box) to return to the magnified image.

Live Panning



In a higher zoom level, use the slide gesture (or use the Joystick) to navigate the image for seeing more without moving the paper.

Push the joystick in any direction and turn the zoom button to display the bar for the panning speed.

To adjust the panning speed, turn the magnification button or adjust the slider on the screen with your finger to the desired position.

Do not press any button for 5 seconds or briefly press the home or enter button or tap the inactive area to close the panning speed setting.

The menu bar in zoom mode

Briefly press the home button in zoom mode or slide your finger upwards from the bottom of the screen to open the menu bar.

If you do not perform any operation for 10 seconds or briefly press the home button, the menu bar will be closed.

Select the desired icon on the touchscreen (or use the joystick to select and the enter button to confirm).

Lighting



Show the menu bar and tap the light bulb on the left to switch the entire lighting ON and OFF. By tapping on the lamps on the right, you can switch the left and right LEDs ON and OFF individually. This can be helpful to minimize glare on the reading material.

Brightness

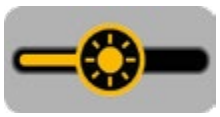

Open the menu bar and select the brightness symbol with your finger (or use the joystick). Slide your finger to the left or right (or turn the magnification button) to increase/decrease the brightness.

No operation for 10 seconds, briefly pressing the home button or tapping the inactive area closes the controller.

Adjusting the contrast (in semi color mode)

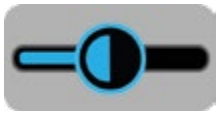

The contrast is automatically optimized in the semi color mode, but can also be set manually. Press the color mode button while turning the magnification button to adjust the contrast.

Slide your finger (or rotate the magnification button) to increase/decrease the contrast.

No operation for 5e seconds, briefly pressing the home button or tapping the inactive area closes the controller.

Volume



In order to ajust the button/speech guide volume, use the volume buttons on the right side of the device or slide the slider on the screen with your finger to the desired position.

Freeze frame function

Press the Freeze button on the right side of the device to create a freeze frame. Press the button again to return to live mode.

When viewing freeze images, you can change the magnification and color mode as described on page 14.

Save freeze image

In the magnification mode, press and hold the Freeze button for 3 seconds to save the current image.



After saving, you have the option of recording a spoken label. Tap and hold the microphone icon to start recording and release to stop (or press and hold the Read button to start recording and release, to end them).

You can listen to the recorded label by pressing the play icon (or by pressing the zoom button).

If you do nothing for 10 seconds, tap on the home button or on the inactive area to return to the freeze frame.

For the best possible recording quality, please speak loudly and clearly into the microphone to the right of the read button.

Note: The voice label function can be turned ON or OFF in the settings (see page 21).

You have about 2 GB of storage space available. If an error message appears while saving, the memory is full and you have to delete pictures in the gallery or transfer them to a microSD card or USB stick.

Further information on the gallery can be found on page 18 .

Autofocus

In most cases, the autofocus works well and the image is sharp and easy to read. If this is not the case, you can refocus the image by holding your finger on the screen for 2 seconds (or pressing the autofocus button for 2 seconds).

Briefly press the autofocus button to activate or deactivate it.

If you want to write under MANO 16, turn the autofocus OFF before you place your hand under the display to write something. This will prevent the hand or the pen from being in focus and not the writing.

The main menu

If you press the home button for approx. 2 seconds, you will get to the main menu, where you can select the following functions:

- Magnifier
- Open document / picture
- Settings

The selected application is highlighted. Select the icon on the touchscreen (or move the joystick to select and press the enter button to confirm).

In the menu you can go back or exit the menu with the home button.

Open and copy document / picture

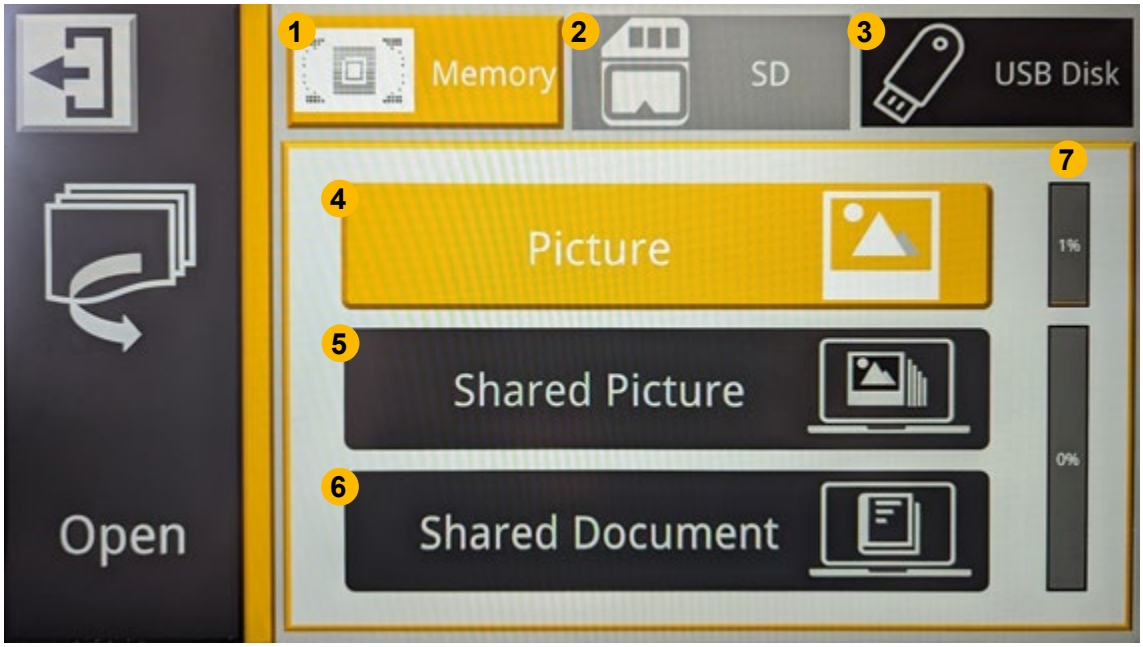

In this menu you can open pictures and text files, magnify them. You also have the option of copying saved files to an SD card or a USB stick. If you want to view external pictures, text files or PDFs on MANO 16, you can copy them from an SD card or USB stick to the device.

If you opened memory, you will see the folders of the internal memory (1). In case an external SD card (2) or a USB stick (3) is inserted, you can view the content by pressing the symbol at the top right or turning the color mode button.

You can look at pictures, texts are displayed in text mode and can be viewed as described on page 14.

Tip: Press the gallery button on the left-hand side of the device to quickly open or close this menu.

Manage files on the device

Here you can see four different folders in which the files are sorted by type and origin.

In the first folder you can view pictures (4) that you have previously saved by pressing and holding the freeze-frame button.

The second and third folder contain pictures (5) and text files (6) that you have previously copied from a SD card or USB stick to your device.

On the right side you can see the used memory in percent (7).

Copy files from an SD card/USB stick to the device



In the open document/picture menu, open the SD card (2) or USB stick (3), select the desired files, and press the copy icon in the left column. Supported picture formats are JPG, BMP, PNG, and TXT, PDF for documents. You will then find these files in the Shared Picture (6) and Shared Document (7) folders.

Copy saved images to an SD card/USB stick



Pictures from the internal memory can be transferred to an external SD card or a USB stick. Select the desired picture in the internal memory and then tap on the copy icon (or press the freeze frame button) to start the transfer. If both the SD card and USB stick are inserted, a window opens in which you must select the external storage medium before the transfer.

Tap the copy icon for 3 seconds (or press and hold the freeze button) to select all pictures and transfer them to the external storage medium.

When multiple selection is enabled, multiple pictures can be transferred at once by tapping the transfer icon (or pressing the freeze button).

Multiple selection

Long tap (or long press the enter button) a specific picture or document in a folder to enable or disable multiple selections.

When multiple selection is enabled, a small box will appear in the lower right corner of each picture. Tap the box (or use the joystick and press the enter button) to select all target pictures / documents. Then the multiple transmission or multiple deletion can be performed as described above.

Long tap the screen or tap the exit icon again (or press the home button or long press the freeze button) to exit multiple selections.

Delete all files from the device



Go to the folders overview by selecting “Open” in the main menu. Press and hold the orientation aids button for approx. 5 seconds and confirm the deletion process by pressing it again or cancel the process by pressing any other button.

Deleting files from a folder



Select the file you want to delete and tap the trashcan icon on the bottom left or press the orientation aids button. Press the button again to confirm the deletion. If you would like to cancel the deletion process, press another key or tap another part on the display.

If you want to delete all files in the current folder, press and hold the trashcan icon or the orientation aids button for approx. 5 seconds and confirm the deletion by pressing again or cancel the process as described above.

You can also delete certain pictures that you have previously marked in the multiple selection.

Open and view pictures

Open the pictures folder on the device or SD card/USB stick. There you can scroll up or down with the slider on the right side of the screen or with the joystick.

Tap the thumbnail to highlight it and tap it again (or press the enter button) to view the picture. If the saved picture has a voice label, you can listen to it by tapping the voice symbol in the top right corner or by pressing the zoom button.

You can view and navigate withing the picture as described in section „Freeze frame function“ on page 17. Press the home button to open the menu bar

.



In the menu bar, tap on one of the arrows to go back / forward one picture.



In the menu bar, tap on one of the double arrows to go to the beginning or end of the pictures.



To rotate the picture, tap on the rotate icon in the menu bar. The last rotation is saved automatically.

Tap the exit icon (or long press the home button) to return to the gallery.

Open and view documents

Here you can access text and PDF files that you have previously copied from an SD card/USB stick or are on a storage medium that has been inserted. Press the home button to return to the gallery.

Double-tap the document to open it. Alternatively, you can open the document with the joystick and the enter button.

Tap the exit icon (or long press the home button) to return to the gallery.



PDFs are automatically opened in image mode. You can magnify the document like an image and adjust your preferred viewing settings. You can scroll through the pages as described below.

Press the P icon on the right side of the menu bar to switch to text mode. In TXT files, only the text mode is available. In text mode, you do not see the original image but only the captured text. You can magnify the image as usual, change the color mode and move the displayed text with your fingers or the joystick. Advanced functions such as freeze image, ruler and mask are deactivated in this view.



Tap one of the arrows in the menu bar to scroll back/forward one page. Press and hold to scroll back/forward first 10 and then 50 pages at a time.



Tap one of the double arrows in the menu bar to go to the beginning or end of the PDF.

Settings

The last item in the main menu are the settings.

You can choose from the following submenus:


Options


language settings


Device information

Tap the submenu you want (or rotate the Color Mode button) to see the available options.

Tap on the item to change the settings (or press the joystick to highlight the item and press the enter button to change it).

Options page

Individual color combinations
Here you can select which semi color combinations shall be displayed.

Voice label
If the function is active, you can record a voice label when saving a freeze image.

Power saving (standby mode)
If this function is active, the device is put into standby mode if it has not been used for 5 minutes. The device switches itself OFF completely if it has not been switched ON again after 15 minutes in standby mode.

Touch Screen
If you prefer to operate the device without a touch screen using only the buttons, you can switch it off here.

Keystone Correction
We recommend that you activate this function, as it automatically compensates for distortions in the image if the display is at an angle to the reading material.

Speech guide
Menus and functions are not only displayed but also described with voice prompts.

Language settings

Male / female voice selection
If your language is set to English, you can also choose between US, UK and AU voices.

Language selection
Here you can choose between the currently available languages. The setting changes the language in the menus and the speech guide.

Device information

Reset to factory settings
Here you can reset the device to the factory settings. After the reset, the device will automatically turn OFF.

Frequency
Frequency offers the options 50 Hz and 60 Hz which can be changed depending on the region in which you are located. If the picture flickers, changing the frequency can lead to an improvement.

User Interface
Here you can choose between Standard and Simple.
In simple mode, only the basic functions of a magnifying system are available:

- simplified magnifier without: menu bar, adjustable lighting, line ruler/mask, freeze image/saved images
- Joystick inactive, gestures are available on the touchscreen
- Reduced number of semi color modes (hold down the semi color button to edit the predefined color combinations)
- Menu item “Open images/files” not available, no external storage devices

Information about the system
Here you can find information such as the current firmware version.

Hardware reset



If the device freezes and cannot be turned OFF the regular way, press the power button and both volume buttons at the same time to do a hardware reset.

Handling of the battery

Attention: A prerequisite for a long battery life is the correct operation and charging of the battery.

Make sure the battery is fully charged before first use of the system. For charging, connect the power adapter with the power port on the left side of the system and plug it into an AC outlet.

If the magnifier is not used for a longer period of time, the battery loses its charge even if the device is switched OFF and a deep discharge and damage of the battery may occur. This can be avoided by fully charging the battery beforehand.

Changing the battery

The battery can be removed from the device without tools. Turn the opened device upside down so that you can comfortably reach the bottom of the device. Press the release button on the back and the battery will be released. Take out the battery and insert a new one.





IV. Troubleshooting

The device cannot be switched ON
- Connect the device to the power adapter
- please charge the battery

The device cannot be switched OFF
- Perform a hardware reset by pressing the power button and both volume buttons simultaneously.

Black screen or white screen
- If the device is on a flat, clean surface, or if there is nothing on the base, the screen can be black or white.
- Adjust the magnification
- Set the color mode
- Restart the device

The picture doesn't change
- The device may be in freeze image or playback mode
- Restart the device

Dirt or smudges on the screen
- Adjust the brightness
- Clean the LCD screen and camera

The Picture is blurred
- Check if the autofocus is deactivated
- Move your hand back and forth over the displayed document to refocus
- Tap the screen for 2 seconds to manually set the focus.

If the problem is not solved, reset the device to factory settings and perform a hardware reset. If you have any further problems, please contact Reinecker Vision GmbH

V. Warranty information

1. Reinecker Vision GmbH grants a warranty of 24 months (warranty period only valid within the European Union) against defects in manufacture counted from date of invoice ex Reinecker Vision GmbH.
2. All parts that have been replaced when repairing the unit will automatically become property of Reinecker Vision GmbH.
3. Damage caused by improper use or by non-compliance with the operating instructions will result in the invalidation of the warranty.
4. Interventions from persons other than Reinecker Vision GmbH authorized specialists may lead to invalidity of warranty.
5. The liability for material defects does not include light sources serving to illuminate the reading object and other parts subject to wear and tear, e.g. rechargeable batteries.
6. If a warranty claim is necessary, the system has to be returned to the manufacturer in Alsbach-Hähnlein or to your authorized dealer in the original packaging including all components. The manufacturer does not carry the cost for transport, packaging and insurance. Prior to returning the system, a RMA number issued by Reinecker Vision is required. Please have the exact serial number of your system before hand.

Phone number: +49 6257 9311-0

View our General Terms and Conditions.

VI. Technical details

Type	MANO 16 (MANO1601/MANO1601)
Display	FullHD 15.6" (approx. 39.5 cm) touch display on a tiltable stand, screen resolution: 1920 x 1080
Cameras	Ultra HD 4K camera, video resolution: 3840 x 2160
Zoom	Document view: 1.4x - 54x (depending on the viewing angle)
Color mode	True colors, up to 16 semi colors adjustable
Freeze image function	Image storage, storage capacity: approx. 2 GB
External file formats	Image formats: JPG, BMP, PNG Document formats: TXT, PDF
Rechargeable battery	exchangeable Li-Ion battery
Operating time	up to approx. 5.5 hours (depending on the application)
Charging time	approx. 3 hours
Power adapter	Input: 110-240V; Output: 12V / 3A
Dimensions	set up approx. 45 x 32,5 x 32,5 cm/17.7 x 12.8 x 12.8 in, folded approx. 45 x 5 x 32,5 cm/17.7 x 2 x 12.8 in
Weight	4.6 kg/10.1 lbs (including battery)

Manufacturer

Reinecker Vision GmbH
International Contact

sales department, customer relations:
Sandwiesenstraße 19
DE-64665 Alsbach-Hähnlein

customer service:
Erlenweg 3
DE-64665 Alsbach-Hähnlein

Tel.: +49 6257 9311-0
Fax: +49 6257 9311-8230

Email: international@reineckervision.de
www.reineckervision.com

SRN: DE-MF-000025998

In case service is necessary, please contact your authorized distributor.

Hersteller

Reinecker Vision GmbH
Zentrale

Vertrieb, Kundenberatung:
Sandwiesenstraße 19
64665 Alsbach-Hähnlein

Kundendienst:
Erlenweg 3
64665 Alsbach-Hähnlein

Tel.: 06257 93 11-0
Fax: 06257 93 11-8008

Email: info@reineckervision.de
www.reineckervision.de

SRN: DE-MF-000025998

Bitte wenden Sie sich bei Fragen oder einem Servicefall direkt an unser Hauptwerk in Alsbach-Hähnlein.

Bei im Ausland erworbenen Produkten kontaktieren Sie im Servicefall bitte Ihren dort ansässigen Händler.

Version 1.0, as of 04/24, item no. 00010298
Subject to change.

REINECKER