User manual

mezzo *EDU*

EN

Please read this user manual carefully prior to installation, use and maintenance for your own safety and in order to avoid damages at your system.

REINECKER

Reinecker Vision GmbH
Sandwiesenstraße 19 · 64665 Alsbach-Hähnlein
Email: info@reineckervision.de · www.reineckervision.de

Konformitätserklärung
Declaration of conformity

Wir erklären in alleiniger Verantwortung für alle unsere Systeme,
dass diese mit den folgenden Richtlinien übereinstimmen.

We declare under our sole responsibility that the systems, which have been brought into the market by us, meet the requirements of the following regulations.

mezzo EDU

Richtlinie 2017/745/EU
Medical Device Regulation (MDR)
Risikoklasse I nach Anhang VIII Regel 13
CE Konformität nach Anhang IX
und
RoHS II (Richtlinie 2011/65/EU)

Regulation (EU) 2017/745
concerning medical devices risk class I
according to Annex VIII standard 13
CE conformity of Annex IX
and
RoHS II Regulation (EU) 2011/65

Die CE– Kennzeichnung auf dem Gerät dokumentiert diese Übereinstimmung.
The CE mark on the system points out this accordance.

Alsbach-Hähnlein,
01.01.2021
Ort und Datum der Ausstellung
Place and date of issue

M. Reinecker Geschäftsführer
M. Reinecker General Manager
Name und Unterschrift des Befugten
Name and signature of the authorized person

Content

I. General Information 6
Notes on the electromagnetic compatibility (EMC) 6
Storage of the user manual 6
Product description 6
Medical device 7
Purpose 7
Evolution and lifetime of products 7
Safety advice 7
Combination with other medical products 7
Precautions by alteration of the performance of the system 8
Reinstatement/installation and maintenance 8
Cleaning of the system 8
Special advice for transport and storage 8
Disposal of the unit according to (EU) 2012/19 8
Power supply 8
Safety instructions to avoid damage 9

II. Instructions for the reading system mezzo EDU 10
Delivery content 10
Available Options 10
Cameras 10
- Focus camera: FullHD camera with digital zoom and comfort auto-focus 10
- Distance camera: FullHD+ camera with optical and digital zoom 10

Starting with mezzo EDU 10
- Mains operation 10
- Power ON 10
- Power OFF 11
- Automatic saving of device settings 11
- Replacement of lighting 11
- Important note to the use of power supply 11

Installation of the system 11
Alignment of monitor 13
Connection of the unit 14
Description of the control elements 14
- Power switch ON/OFF 14
- Light adjustment (50% / OFF / 100%) 14

General note on using the LED-light 14
Description of the control bar 15
- Switching button distance mode / document mode 15
- Menu settings ON / OFF 15
- Brightness 15
- Color settings 16
- Zoom OUT 16
- Zoom IN 16
- Auto-focus ON / OFF 16
- Line marker/Shadowing / Auto-Exposure ON / OFF 16
- Auto-Exposure ON/OFF (autom. aperture control) 17
- Line marker/Shadowing horizontal 17
- Line marker/Shadowing vertical 17
- 5-button control panel (distance camera control) 17
- Navigation of the distance camera 17

Down 17
Right 17
- Saving the position of the distance camera 18
- Recall saved positions 18
- Function „Last position“ 18

Menu settings mezzo EDU 19
- Opening the menu 19
- Select menu options 19
- Change menu options and confirm 19
- Menu options 20

Menu settings distance camera 22
- Opening menu 22
- Change menu option and confirm 22
- Change menu option 22
- Menu options 22

Troubleshooting 30
Technical details 30
Warranty Information 31
Notes 32

I. General Information

Important notes on the operation of the reading system mezzo EDU!
Please read them carefully prior to the operation of the reading system!

Notes on the electromagnetic compatibility (EMC)

This reading system is suited for use in all set-ups including the domicile that are connected directly to a public power supply for buildings with residential purposes.

This reading system is designed for the use in the indicated electromagnetic environment. The user should ensure the use in the indicated environment.

This reading system operates on HF-Energy exclusively for its own function. Therefore the emitted interference of high frequency disturbances is very low and the interference with other appliances operated close-by is improbable. When operating the reading system simultaneously with other systems, however, the possibility of disturbances of the system or other systems should not be neglected.

For this reason it should be ensured that the system is not placed directly beside or on top of another system. If the set-up of this system in the proximity of medical, measuring devices cannot be avoided, the operator of these devices has to be informed that it is necessary to observe the performance of the system to control the conventional use of the system in the chosen set-up.

Electronic devices are sensitive towards electric discharge and towards high frequency electromagnetic fields.

Attention: In order to avoid high frequency disturbances the operator should respect a minimum distance of one meter to portable and mobile HF-telecommunication devices.

Please also see chapter: Safety advice (page 7).

Storage of the user manual

The user manual is an essential part of your reading system. Please keep the booklet in a safe place for future reference.

Product description

mezzo EDU is an opto-electronic reading system for magnifying text and pictures for professional and permanent private use.

Text and pictures are captured using the integrated cameras and displayed on the monitor.

- lightweight and compact reading system with 16“ LED monitor for comfortable reading and distance viewing
- two easy-to-use cameras, high ease of use of the motorized distance camera: switch between internal and distance camera picture display with up to four storable positions
- switchable monitor display (distance camera to document camera image and vice versa)
- LVHD -technology for high quality pictures with virtually no picture noise
- Adjustable monitor for comfortable reading position, easy positioning and effortless assembly/disassembly
- compact folding function

Medical device

This reading system is classified as a medical device, class I according to (EU) 2017/745, Annexe VIII, standard 13. For the distribution to countries outside the EU the respective country-specific guidelines have to be regarded.

Purpose

This opto-electronic reading system is a medical device to assist with the reading and magnifying of printed text and pictures. Visually impaired people can compensate for their loss of visual acuity by using this device.

Evolution and lifetime of products

The Medical Device Directive regulates by law that manufacturers of medical devices shall determine a period of safety operation of a product. We fulfill hereby legal requirements and determine - for formal reasons - a period of three years after date of first purchase.

Note:
The mentioned life span does not reflect the complete life span of the mezzo EDU. It is rather an indication on when the product might be obsolete and substitution might be recommended due to new product developments.

Safety advice

The device has to be installed in closed and dry rooms only. Do not plug it into an electrical circuit that is also being used for any life sustaining or support systems. The device may not be used in the patients environment.

This device should not be operated in explosion-endangered environments. This opto-electronic device should only be installed in conjunction with modern electrical circuitry.

Combination with other medical products

If the device is used near another electrical device, monitor the other device to ensure that it is working properly. In case of doubt please contact Reinecker Vision GmbH or any licensed distribution partner.

Precautions by alteration of the performance of the system

Stop using the reading device if technical features or performances should change. Switch the device OFF and disconnect the power supply from the mains wall socket. Refer directly to your authorized dealer or to Reinecker Vision GmbH Service Center. Do not use the system again in this condition.

Reinstatement/installation and maintenance

This device may be technically maintained and reconditioned by Reinecker Vision GmbH only or by an authorized technician. Reinstatement may only take place after the system has been cleaned and safety checked.

Cleaning of the system

- mezzo EDU has to be disconnected from the power supply before cleaning.
- Clean the system with a slightly damp cloth and a mild household detergent.
- Interior of device must NOT come in contact with liquids.

Special advice for transport and storage

For reasons of safety, the unit must only be transported and stored in the original packing. The unit must be stored in dry and closed rooms in the original packing. The following conditions for transport and storage have to be respected:

- Air pressure 700 - 1000 hPa
- Temperature range +5°C to + 50°C
- Relative air humidity 30% to 80%

Disposal of the unit according to (EU) 2012/19

The device contains of electronic components. To avoid damage to the environment, the country-specific rules have to be respected.

Power supply

Only use the original power supply and cables which are included in the delivery by Reinecker Vision GmbH.

Caution:
The use of any other equipment might lead to an increased electromagnetic emission and to a product damage.

Safety instructions to avoid damage

Please respect the following instructions for your own safety:

1. Do not plug the AC adapter into a faulty electrical outlet. Doing so may cause electrical shock or fire.
2. Do not touch the AC adapter with wet hands.
3. Only use the original power supply and cables which are included in the delivery by Reinecker Vision GmbH. The use of any other equipment might lead to a product damage.
4. For mezzos with battery operation only: Only use the original battery, which is included in the delivery by Reinecker Vision GmbH. The use of any other equipment might lead to a product damage.
5. Do not expose the system to direct sunlight or to very hot or cold environment, as this would harm the picture quality.
6. Do not operate this device below +5°C or above +40°C.
7. No liquids must reach the interior of the system. Only operate the device in a dry environment.
8. The device may not be operated next to medical devices (patients environment).
9. Do not lean on the screen, touch the screen with any object or lay heavy objects on the device. This may cause damage to the device.
10. Do not try to repair or to dismantle the system by your own. This would automatically void the warranty. If you need any technical assistance please get in contact with the local distributor or with Reinecker Vision GmbH.
11. Always switch OFF the system and disconnect it from the power supply before cleaning it. Only use a soft and slightly damped cloth. Only use a mild household detergent. Do not use alcohol containing or strong detergents.

II. Instructions for the reading system mezzo EDU

Delivery content

- Reading system mezzo EDU, 16” monitor **MEZEDU01**
- Carrying bag (Space for mezzo EDU 16”) **MEZVARTA**
- Power adapter 12V DC / 5000mA
- Adapter cable (country-specific)
- User manual
- Service information

Accessories

- XY-table mezzo with friction brake **ZBXTFIX0**
- XY-table mobile **ZBMEZZXT**

Cameras

mezzo EDU is equipped with the following camera types:

Focus camera: FullHD camera with digital zoom and comfort auto-focus

- Magnification from approx. 2,1 to 24x* (at monitor 16" class)
  *factory settings, extended magnification range adjustable in the menu
- UVHD - Technology: high quality pictures with virtually no picture noise

Distance camera: FullHD+ camera with optical and digital zoom

Starting with mezzo EDU

Mains operation

For mains operation, make sure that the enclosed power supply unit is connected to the power supply and to the power supply socket (12 VDC) of the reading system.

Power ON

Press the ON/OFF button to switch ON the device. When the mezzo and the base plate is illuminated, you can put a page or an object onto the table.

All the possible settings – for example zoom, colour or brightness – can be adjusted individually.

Power OFF

Switch OFF the device by pressing the ON/OFF button.

Automatic saving of device settings

All latest used settings of the device will remain active, when switching ON the device again.

Replacement of lighting

The electronic magnifier is equipped with a high power LED Illumination.

If replacement of the lamp is required it should only be done by a specialist or by Reinecker Vision GmbH.

Important note to the use of power supply

Please only use the power supply included in the delivery. Use of any other power supply will void the warranty!

Installation of the system

Unpack your mezzo EDU carefully and place it on a solid horizontal surface. If you have not purchased an optionally available stand that fits to the product you must provide a solid surface for the system with sufficient surface area.

Set up your mezzo EDU as described below:

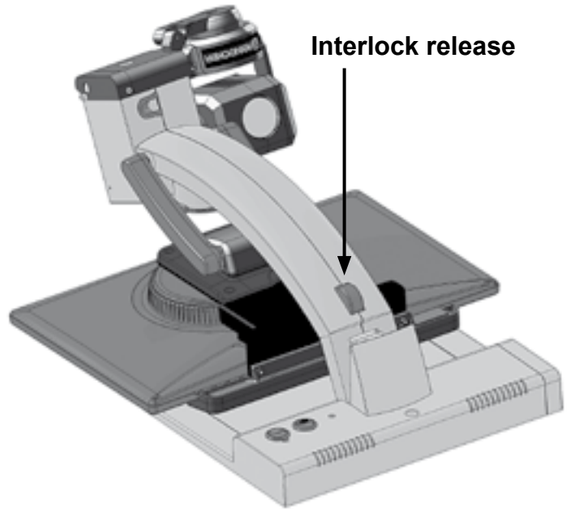

- Folded mezzo EDU for transport.

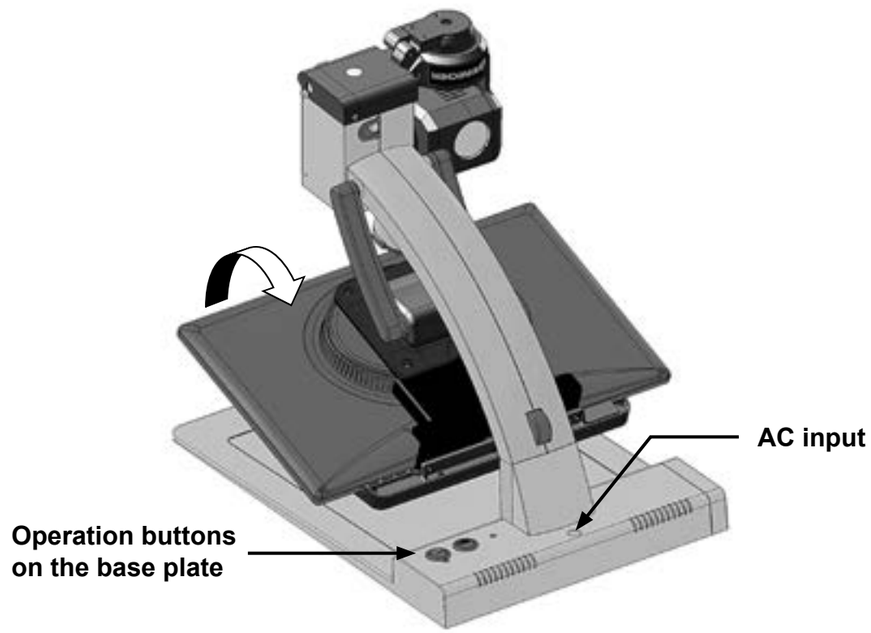

- Bring the camera/monitor arm in the upright position until the interlock release snaps in.

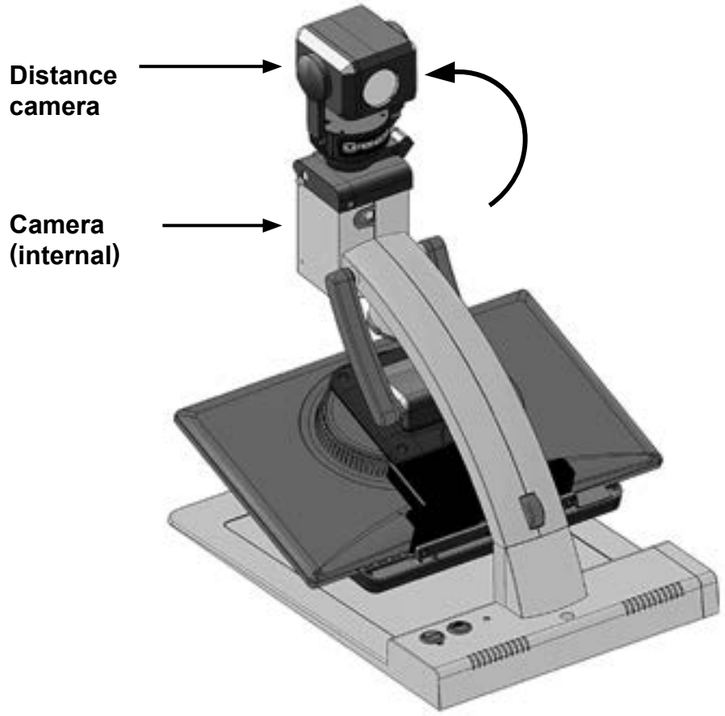

- Bring the distance camera up until the sub-contruction of the distance camera is held by the magnet.

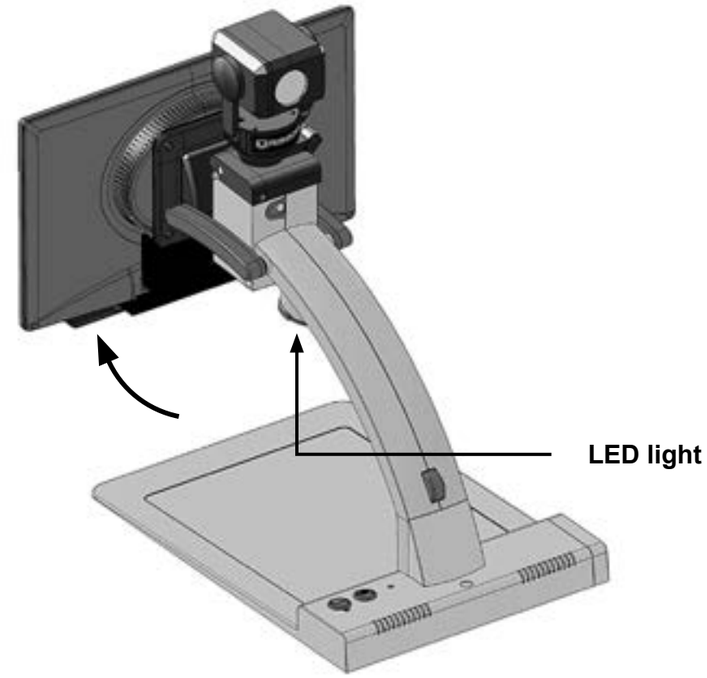

- Move the monitor upwards.

Alignment of monitor

Due to the monitor's technology contrast and brightness change depending on the angle of view.

The highly flexible monitor arm enables you to adjust the monitors height and angle according to your best ergonomic position.

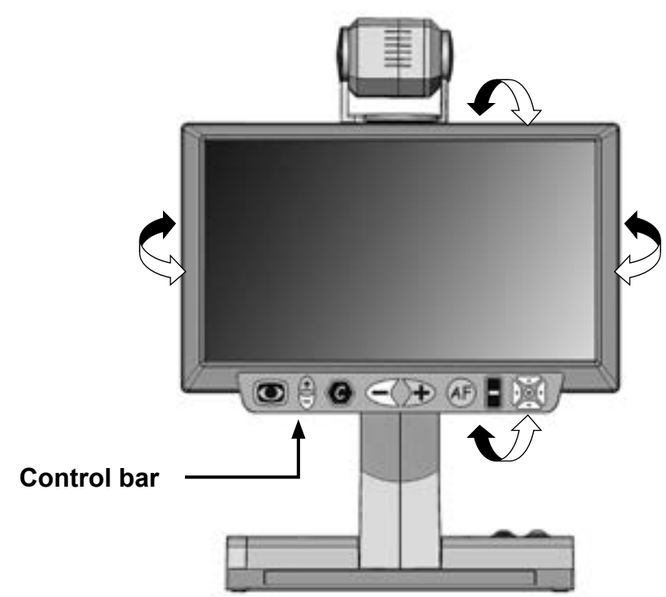

Connection of the unit

Connect the power supply to a mains wall socket and plug the adapter end of the cable into the AC input socket (12V DC) located on the base plate of the mezzo EDU.

Note:
The supplied plug-in power supply is exclusively for the operation of this device.

Please do not use any other power adaptor or cable. Once the device is plugged in, it is ready to use.

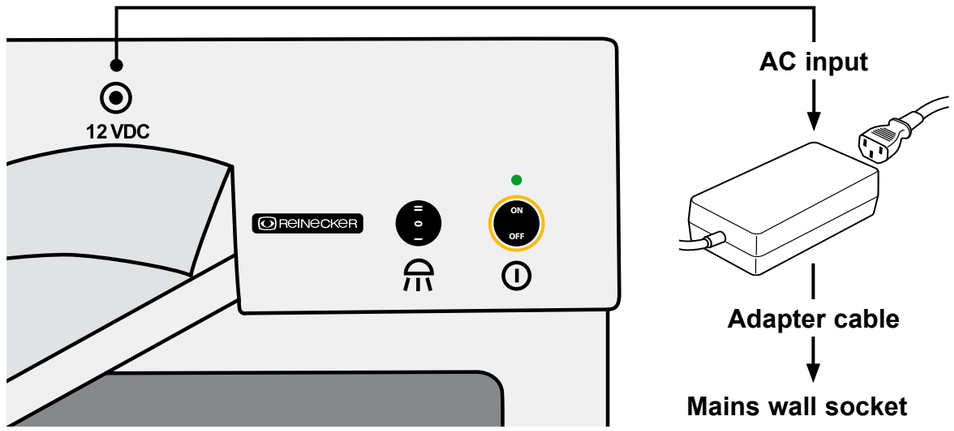

Description of the control elements

Power switch ON/OFF

Only after connecting mezzo successfully to the power supply, the device can be switched ON or OFF using the toggle switch. After switching ON, the green power LED above the toggle switch lights up.

When the device will be turned OFF, the latest used settings are saved automatically.

When switching ON again, the latest used settings are recalled.

Attentions!:
If the base plate is not lit up after switching ON the device, please check, if the LED-light is ON (please see next paragraph).

Light adjustment (50% / OFF / 100%)

Press the toggle switch to adjust the LED lighting accordingly:

I = LED-light min. 50%

0 = LED-light OFF

II = LED-light max. 100%

General note on using the LED-light

While using the device, it could be helpful to switch OFF or reduce the LED-light of the device, for example, when the light in the room or from outside changes (sunlight).

Description of the control bar

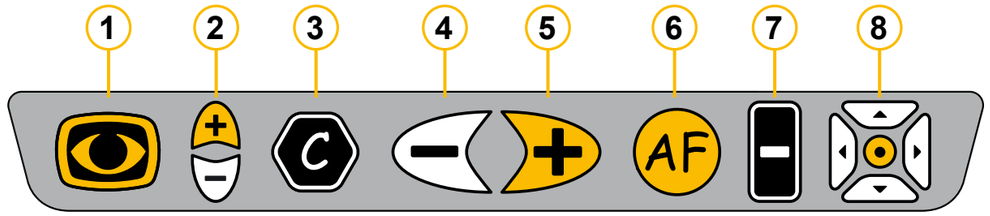

1) Switching button distance mode/document mode, Menu settings ON/OFF

2) Brightness

3) Color selection

4) Zoom OUT

5) Zoom IN

6) Auto focus ON/OFF

7) Line marker/Shadowing/Auto-Exposure ON/OFF (autom. aperture control)

8) 5-Button-Control (distance camera control)

Switching button distance mode/document mode

By briefly pressing the control key, you can switch from document mode (internal camera) to distance mode or vice versa.

Menu settings ON/OFF

Press the control button (in distance or document mode) for approx. 5 seconds to access the respective menu settings of the active camera.

In document mode (internal camera) you will access the menu of the internal camera. In distance viewing mode, you will access the menu of the distance camera.

If you want to leave the menu settings, confirm the menu item „Exit“ or hold the control button pressed until the menu window disappears from the screen.

Brightness

Use the „plus / minus button“ to adjust the brightness (light intensity) of the image shown on the monitor.

Plus-Button: Increase brightness
Minus-Button: Reduce brightness

Color settings

By briefly pressing the color selection button, the following colors can be selected by default:

Position 1: full color display
Position 2: black font, white background
Position 3: white font, black background
Position 4: green font, black background
Position 5: yellow font, black background
Position 6: yellow font, blue background

The chosen color mode appears temporarily on the lower side of the screen (when activated).

Note:
Individual color combinations can be defined via the internal menu.
You also have the possibility to reduce the number of color combinations.

Zoom OUT

By briefly pressing the control button, the screen view is gradually reduced.
When the control button is pressed continuously, the screen view is continuously reduced.

Zoom IN

By briefly pressing the control button, the screen view is gradually enlarged.
When the control button is pressed continuously, the screen view is continuously enlarged.

Auto focus ON/OFF

By briefly pressing and releasing the central (“zoom”) button the auto-focus can be activated/deactivated. By having the auto-focus activated, the camera adjusts the picture sharpness automatically.

Line marker/Shadowing/Auto-Exposure ON/OFF

Repeated pressing of the control buttons gives you the following options:
1) Line marker/Shadowing horizontal*
2) Line marker/Shadowing vertical
3) Line marker/Shadowing deactivation

**In distance mode, only the horizontal line marker can be activated.*

Auto-Exposure ON/OFF (autom. aperture control)

When the control button is pressed permanently, the automatic aperture control (auto-exposure) in the distance camera is switched ON or OFF.

Auto-Exposure ON:
The brightness of the camera image is automatically adopted according to the lighting conditions.

Auto-Exposure OFF:
The brightness of the camera image is no longer automatically adopted to the lighting conditions.

Line marker/Shadowing horizontal

Use the „plus“ button to move the line marker upwards.
Use the „minus“ button to move the line marker down.
As soon as the line marker passes the lower edge of the screen, the shadowing will appear from above and below (symmetrical).

Line marker/Shadowing vertical

Use the „plus“ button to move the line marker to the left.
Use the „minus“ button to move the line marker to the right.
As soon as the line marker passes the lower edge of the screen, the shadowing will appear from the left and the right (symmetrical).

5-button control panel (distance camera control)

The 5-button control panel allows you to do the following actions and settings.

Navigation of the distance camera

The distance camera can be moved to the desired position by pressing the „arrow buttons“.
When moving, a crosshair will be shown at the center of the screen. The crosshair is an indication of where the camera is pointing and is focussed.
(The crosshair can be turned off in the menu.)

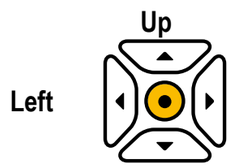

Saving the position of the distance camera

The distance camera is made to save up to 4 different positions.

Alternative 1:
Briefly press the yellow control button to activate the saving process. Then press and hold the desired position button (Pos. 1-4) until the selected memory position briefly appears on the screen.

Alternative 2:
Press the yellow control button in equal intervals one after the other until you have reached the desired memory position. In this position, press and hold it. (Pos. 1-4).

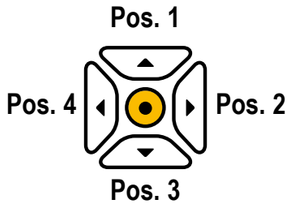

Recall saved Positions

Alternative 1:

Press the yellow control button quickly one after the other and release it at the desired memory position (Pos. 1-4). The distance camera then moves to the saved camera position.

Alternative 2:

First press the yellow control button briefly and then quickly press the desired position button (Pos. 1-4).

The distance camera then moves to the saved camera position.

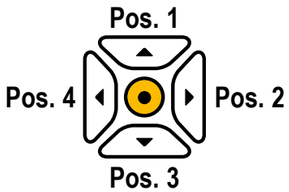

Function „Last position“

Press the yellow control button briefly to switch between the two last selected saved positions.

The message of the selected saved position appears briefly on the screen.

Menu settings mezzo EDU

Opening the menu

Press the control button for approx. 5 seconds until the menu window appears on the screen.

Main Menu	
Color saturation	+50
Language	English
AF Modus	auto
Min. Magnification	Standard
Max. Magnification	Standard
Mains Frequency	50Hz
Monitor Brightness	80%
Reset to Factory Settings...	
Advanced Settings...	
Exit	

Select menu options

Use the up/down arrow buttons to move the cursor to the option you like to change.

Change menu options and confirm

Confirm the selected option with the „Auto focus“ button.
Then change the value with the arrow keys „up / down“.
Then confirm the entry with the „Auto focus“ control button.

Menu options

Main Menu	
Color saturation	**Adjustment range from -50 to +50**
Language	**English | German | French | Swedish | Italian | Norwegian | Japanese**
AF mode	**auto | manual** (via pressing the button)
Min. Magnification	**Low | Standard**
Max. Magnification	**High | Standard**
Mains Frequency	**50Hz | 60Hz**
Monitor Brightness	**100% | 75% | 50% | 25%**
Reset to Factory Settings...	Press button „Auto-focus“, to recall to factory settings
Advanced Settings...	Confirm selection to enter advanced settings (please see overview)
Exit	

Overview:	Advanced Settings
	Color Combination Setup...
	Color Ruler...
	Mask Transparency
	OSD Messages
	Reflection Filter
	Save User Settings
	Recall User Setting
	Change factory Setup...
	Return

Main Menu	
Advanced Settings	
Color Combination Setup...	
Color Combinations 1-6	
Mode	**Disabled | Full Colour | Greyscale | False Colour**
Foreground	**Black | Red | Green | Blue | Yellow | Magenta | Cyan | White | User 1 | User 2**
Background	**Black | Red | Green | Blue | Yellow | Magenta | Cyan | White | User 1 | User 2**
Swap Fore-/Background	Press „Auto-focus“ to invert foreground and background colours
Exit	

Main Menu	
Advanced Settings	
Color Combination Setup	
User colours	
User colour 1 - Red	**Adjustment range from 0 to 31**
User colour 1 - Green	**Adjustment range from 0 to 31**
User colour 1 - Blue	**Adjustment range from 0 to 31**
User colour 2 - Red	**Adjustment range from 0 to 31**
User colour 2 - Green	**Adjustment range from 0 to 31**
User colour 2 - Blue	**Adjustment range from 0 to 31**
Return	

Main Menu	
Ruler/Mask Settings	
Color Ruler	
Red	**Adjustment range from 0 to 31**
Green	**Adjustment range from 0 to 31**
Blue	**Adjustment range from 0 to 31**
Return	

Main Menu	
Advanced Settings	
Mask Transperancy	**50% | 25% | 0%**
OSD Messages	**ON | OFF**
Anti Reflecion Mode	**ON | OFF**
Save user Settings	Press button „Auto-focus“ to save the user settings
Recall User Settings	Press button „Auto-focus“ to recall the saved user settings
Recall factory settings...	Access only by authorized service
Return	

Menu settings distance camera

Opening menu

Press the control button for approx. 5 sec. until the menu window appears on the screen.

Extended Menu	
Image Settings...	
Color Settings...	
Preset Settings...	
OSD-Messages	ON
Language	English
User Menu...	
Exit	

Select options

Use the up/down arrow buttons to move the cursor to the option you like to change.

Change menu option and confirm

Confirm the selected option with the „Auto-focus“ button.
Then change the value with the arrow keys „up/down“.
Then confirm the entry with the „Auto-focus“ control button.

Change menu option

Alternatively, you can change the selected option directly with the „Line marker/shadowing“ control button.

Menu options

Extended Menu	
Image Settings...	
Image Rotation	0° | +90° | 180° | -90°
Detail enhancement	Adjustment range from 0 to 24
Max. Digital Zoom False	OFF | Adjustment range from 1,5x to 15,0x
Max. Digital Zoom Real RHC	
AF	Continuous | Semi-automatic | Semi-autom. + Zoom | Continuous / Zoom
Return	

Extended Menu	
Color settings...	
White Balance Mode	Autom. | via button
Gain Red	Autom.
Gain Blud	Autom.
Perform Semi-autom. WB	Confirm selection to perform semi automatic white balance
Color saturation	Adjustment range from -64 to +64
Background Color	n/a
Foreground Color	n/a
Mode	n/a
Return	

Extended Menu	
Preset Settings	
Function 1	Zoom Tele | Zoom Wide | Auto-Focus | Focus Near | Focus Far | Mask ON/OFF
Function 2	Zoom Tele | Zoom Wide | Auto-Focus | Focus Near | Focus Far | Mask ON/OFF
Function 3	Zoom Tele | Zoom Wide | Auto-Focus | Focus Near | Focus Far | Mask ON/OFF
Restore Default Settings	Confirm to recall standard settings
Use Alternative Settings	Confirm to recall alternative settings
Return	

Extended Menu	
OSD Messages	ON | OFF
Languages	English | German | French | Swedish | Norwegian
User menu...	Confirm to go to main menu *(see overview)*
Exit	

Overview:	Main Menu	
	Brightness	**+50**
	Contrast	**+50**
	Color Saturation	**- 30**
	Ruler/Mask...	**Aus**
	Ruler/Mask Settings...	
	AF Mode	**Continous**
	Reset to factory settings	
	Recall User Settings	
	Advanced Settings....	
	Exit	

Main Menu	
Brightness	**Adjustment range from -50 to +50**
Contrast	**Adjustment range from -50 to +50**
Color Saturation	**Adjustment range from -50 to +50**
Ruler/Mask	**OFF** | Line marker and shadowing disabled **Ruler** | Line marker active **Mask** | Shadowing active
Return	

Main Menu	
Ruler/Mask	
Ruler/Mask	**OFF** | Line marker and shadowing disabled **Line marker** | Line marker active **Shadowing** | Shadowing active
Ruler position	**0 to 100** | Line marker is adjustable
Mask position	**0 to 100** | Shadowing reducable
Ruler Mode	**Horizontal** | place line marker horizontal **Vertical** | place line marker vertical

Main Menu	
Ruler/Mask Settings	
Mask Mode	**Left/Right** | Shadowing left/right; Shadowing covers max. 50% **Top/Bottom** | Shadowing top/bottom; Shadowing covers max. 50% **Left/Right FS** | Shadowing left/right; Shadowing covers max. 90% **Top/Bottom FS** | Shadowing top/bottom; Shadowing covers max. 90% **Full-Screen** | Shadowing covers all of the monitor
Mask Transparency	**50% | 25% | 0%**
Return	

Main Menu	
Ruler/Mask	
Ruler Color	
Red	**Adjustment range from 0 to 31**
Green	**Adjustment range from 0 to 31**
Blue	**Adjustment range from 0 to 31**
Return	

Main Menu	
AF Mode	**Continuous | Semi-automatic | Semi-autom. + Zoom | Continuous / Zoom**
Reset to factory settings	Confirm selection to the reset to factory settings
Reset to User Settings	Confirm selection to the reset to user settings
Advanced Settings	Confirm selection to go to advanced settings *(see overview)*
Exit	

Overview:	Advanced Settings	
	Color Combination Setup	
	Anti Reflection Mode	OFF
	Monitor Brightness	100
	Language	English
	Perform White Balance	
	White Balance Mode	Autom.
	Sharpness Settings...	
	OSD Messages	ON
	Special Settings...	
	Return	

Advanced Settings	
Color Combination Setup	
Color Combinations 1-6	
Mode	Adjustment range from -50 to +50
Foreground	Black | Red | Green | Blue | Yellow | Magenta | Cyan | White | User 1 | User 2
Background	Black | Red | Green | Blue | Yellow | Magenta | Cyan | White | User 1 | User 2
Swap Fore-/Background	Confirm selection to change viewing mode
Return	

Advanced Settings	
Color Combination Setup	
User Colors	
User Color 1 - Red	Adjustment range from 0 to 31
User Color 1 - Green	Adjustment range from 0 to 31
User Color 1 - Blue	Adjustment range from 0 to 31
User Color 2 - Red	Adjustment range from 0 to 31
User Color 2 - Green	Adjustment range from 0 to 31
User Color 2 - Blue	Adjustment range from 0 to 31
Return	

Advanced Settings	
Anti Reflection Mode	OFF | ON | Auto (0-9) | autom. setting is adjustable
Monitor Brightness	Adjustment range from 37 to 100
Language	English | German | French | Swedish | Norwegian
Perform White Balance	Confirm selection to perform white balance
White Balance Mode	Automatic | via button

Advanced Settings	
Sharpness Settings	
Real Color Sharpness	Adjustment range from 0 to 24
False Color Sharpness	Adjustment range from 0 to 24
Return	

Advanced Settings	
OSD Messages	ON | OFF
Special Settings...	Confirm selection to go to special settings *(see overview)*
Zurück	

Overview:	Special Settings	
	Zoom Extension	Ein
	Max. Digital Zoom	3.5x
	Customize Buttons...	
	Store User Settings	
	Recall User Settings...	
	Reset to Factory Settings...	
	Expert Settings...	
	Monitor Size	Auto
	Room Camera Settings...	
	Zoom Extension	
	Return	

Special Settings	
Zoom Extension	ON | OFF
Max. Digital Zoom	OFF | Adjustment range from 1,5x to 15,0x

Special Settings	
Customize Buttons...	
Up	Disabled | Zoom Tele | Zoom Wide | Brightness + | Brightness - | False colours | Overview mode | Auto-focus | Focus Near | Fokus Far | Auto Exposure
Down	
Left	
Right	
Center* (Go to second level)	Disabled | Zoom Tele | Zoom Wide | Brightness + | Brightness - | False colour | 2. Layer* | Overview mode | Auto-focus | Focus Near | Fokus Far | Auto Exposure
2nd.+Up	Disabled | Zoom Tele | Zoom Wide | Brightness + | Brightness - | False colour | 2. Layer* | Overview mode | Auto-focus | Focus Near | Fokus Far | Auto Exposure
2nd.+Down	
2nd.+Left	
2nd.+Right	
Return	

Special Settings	
Store User Settings	Confirm selection to save user settings
Recall User Settings	Confirm selection to recall user settings
Reset to Factory Settings	Confirm selection to reset to factory settings
Expert Settings	Access only by authorized service personell
Monitor Size	Auto | 19" | 22" | 24"
Room Camera Settings...	Confirm selection to go to distance camera settings *(see overview)*
Return	

Overview:	Room camera settings	
	Crosshair	ON
	Speed Left	8
	Speed Right	4
	Speed Up/Down	20
	Zoom Dependance	110
	Speed Blackb. Scan	10
	Line Height Blackb. Scan	20
	Reinitialize head...	
	Return	

Room camera settings	
Crosshair	OFF | ON
Speed Left	Adjustment range from 1 to 100
Speed Right	Adjustment range from 1 to 100
Speed Up/Down	Adjustment range from 1 to 100
Zoom dependance	Adjustment range from 0 to 150
Speed Blackb. Scan	Adjustment range from 1 to 99
Line Height Blackb. Scan	Adjustment range from 1 to 99
Reinitialize Head...	Confirm selection to initialize distance camera
Return	

Troubleshooting

Problem	Solution
No image is shown.	Check the mains connection, the cable connection to the monitor and that all relevant systems are switched ON or activated.
Screen is dark.	Check the brightness and contrast settings of the camera/monitor.
True color is not displayed correctly.	Check your reading material, color mode setting, brightness, color saturation and camera lighting.
Battery does not charge or battery charging indicator does not light.	Check that the power supply is correctly connected to the mains socket and that the adapter cable is correctly connected to the mezzo EDU.

Technical details

mezzo EDU	LED flat screen monitor	Weight: approx. 6,5 kg
16"-class monitor	16"-class monitor | ca. 41 cm (1366 x 768 pixel)	Measurements (WxHxL) expanded: approx. 38 x 50 x 52 cm folded: ca. 31 x 19 x 51 cm
Color mode	True colors, preset and individually adjustable artificial colour modes	
Autofokus	Can be switched OFF	

Warranty Information

1. Reinecker Vision GmbH grants a warranty of 24 months (warranty period only valid within the European Union) against defects in manufacture counted from date of invoice ex Reinecker Vision GmbH.
2. All parts that have been replaced when repairing the unit will automatically become property of Reinecker Vision GmbH.
3. Damage caused by improper use or by non-compliance with the operating instructions will result in the invalidation of the warranty.
4. Interventions from persons other than Reinecker Vision GmbH authorised specialists may lead to invalidity of warranty.
5. Partial warranty is valid for light sources serving to illuminate the reading object, batteries and other parts subject to wear and tear.
6. If a warranty claim is necessary, the system has to be returned to the manufacturer in Alsbach-Hähnlein or to your authorized dealer in the original packaging including all components. The manufacturer does not carry the cost for transport, packaging and insurance.

Phone number: +49 6257 93110

View our General Terms and Conditions.

Your authorized distributor:

Notes

Type:	mezzo EDU **(MEZEDU01)**
Serial number:	
Manufacturer:	Reinecker Vision GmbH
Final examination:	
Power supply:	100 VAC – 240 VAC 50-60 Hz
With plug-in power supply:	12V DC/5000mA
Power consumption:	max. 80 watt

Reinecker Vision GmbH
International Contact

sales department, customer relations:
Sandwiesenstraße 19
D-64665 Alsbach-Hähnlein

customer service:
Erlenweg 3
DE-64665 Alsbach-Hähnlein

Tel.: +49 6257 93 11-0
Fax: +49 6257 93 11-8008

Email: international@reineckervision.de
www.reineckervision.de

In case service is necessary, please contact your authorized distributor.

Reinecker Vision GmbH
Zentrale

Vertrieb, Kundenberatung:
Sandwiesenstraße 19
64665 Alsbach-Hähnlein

Kundendienst:
Erlenweg 3
64665 Alsbach-Hähnlein

Tel.: +49 6257 9311-0
Fax: +49 6257 9311-8230

Email: info@reineckervision.de
www.reineckervision.com

Bitte wenden Sie sich bei Fragen oder einem Servicefall direkt an unser Hauptwerk in Alsbach-Hähnlein oder an eine unserer Niederlassungen.

Bei im Ausland erworbenen Produkten kontaktieren Sie im Servicefall bitte Ihren dort ansässigen Händler.

Version 1.1, Stand 01/21, Art.-Nr. 000 10 373
Subject to change.

REINECKER